NEW SMART CARD READER/PROGRAMMER

SILICON CHIP

JULY 2003
$7.25* INC GST NZ$8.25 INC GST
PRINT POST APPROVED - PP255003/01272
ISSN 1030-2662
9 771030 266001 07
siliconchip.com.au

PROJECTS TO BUILD - SERVICING - COMPUTERS - VINTAGE RADIO - AUTO ELECTRONICS

SOLAR POWER for motorhomes and caravans

RFid TAGS

Big Brother is watching you...

TO BUILD:

- PowerUP auto mains switch
- SLAVE FLASH TRIGGER for digital cameras
- Programmable CONTINUITY PROBE

Gadget Central

Enjoy Tomorrow Today!

Your New Hi Tech Gadget Stor

Come in, you'll be surprised!

Magic Pillow in a Bag

Great for camping, picnics or in the car

- Springs out to a standard pillow size
- Moulds to your head and neck for a perfect nights sleep

new

$39.95

Mini USB Optical Wheel Mouse

Optical - no ball to clean and greater accuracy

- Scroll wheel
- Perfect for travelling
- Works on any hard surfa

new

$34.95

3 Piece Cordless Appliance Set

- Mini creamer, dual speed mixer, vacuum cleaner
- Ideal for caravan, camping and travelling
- Compact with no cables
- Requires batteries

new

$24.95

Keyring Breath Analyser

Make sure you are ok to drive!

- Will detect and give reading of Blood Alcohol levels
- Detects as low as 0.01%
- Fits in pocket, purse or keyring

$59.95

new

While offering a good indication of blood alcohol levels, this analyser should not be relied upon to produce precise results.

Hygienic Electronic Whistle

A piercing whistle at the touch of a button.

- Great for sports or personal safety.
- Hang around your neck with the lanyard included.
- Includes batteries (LR44).
- 120dB

new

$19.95

Elegant Electric Corkscrew

Remove corks with ease!! Includes rechargeable batteries, charger and comes complete with table stand.

new

$99.95

Soft rubber nose

UV Pen & Light

Write secret messages or encode your personal belongings in invisible ink. Only to reveal the messages with the UV light included.

$9.95

1000 Foot Air Rocket

Launcher & rockets set.

- Shoots up to 330 metres
- Completely portable
- Uses any heavy duty air pump (not included but available anywhere for around $20)
- Additional rockets & bursting discs available separately
- Entirely safe

new

No pyrotechnic engine: uses compressed air for propulsion

$59.95 GREAT FUN!

All prices in $A

CHATSWOOD
314 Victoria Ave.
Ph: 02 9884 8822
Open 7 Days

BURWOOD
95 Burwood Rd.
Ph: 02 9744 6022
Open 7 Days

LIVERPOOL
225 Macquarie St.
Ph: 02 9822 7822
Open Mon - Sat

Internet Mail Orders: www.gadgetcentral.com.au

Contents

SILICON CHIP

Vol.16, No.7; July 2003

www.siliconchip.com.au

FEATURES

7 RFID Tags – How They Work
RF ID tags are set to replace barcode labelling systems and could even be used to identify people. Here's how they work – by Peter Smith

12 Solar Power For Caravans & Motor-Homes
Want to go solar when you go bush? Here's how to avoid the traps – by Collyn Rivers

PROJECTS TO BUILD

22 Smart Card Reader & Programmer
It hooks up to the serial port of your PC and lets you program both the microcontroller & EEPROM in "Gold" wafer smart cards – by Peter Smith

32 PowerUp: Turns Peripherals On Automatically
Tired of flicking multiple power switches to turn on your PC or stereo system? Build this circuit and you'll only have to flick one switch – by John Clarke

60 A "Smart" Slave Flash Trigger
Does your camera's flash operate in red-eye reduction (multiple flash) mode only? This clever unit counts the number of "pre-flashes" before triggering a slave flash unit – by Jim Rowe

68 A Programmable Continuity Tester
Easy-to-build unit lets you set the continuity "pass" threshold to anywhere between 1Ω and 100Ω. It makes an ideal go/no-go tester – by Trent Jackson

74 The PICAXE Pt.6: Data Communications
PICAXEs can actually talk to each other via a piece of wet string (but you might want to use wire) – by Stan Swan

79 Updating The PIC Programmer & Checkerboard
Here's how to use it with Windows 2000/XP and PCs running faster than 1GHz – by Peter Smith

SPECIAL COLUMNS

40 Serviceman's Log
Faults in unfamiliar models – by the TV Serviceman

56 Circuit Notebook
(1) Infrared Remote Receiver Has Four Outputs; (2) Wide-Range Inductance Meter; (3) Simple Circuit Charges Up To 12 Nicads; (4) Simple Knock Alarm With Piezo Sensor; (5) Gym Agility Strategy Game; (6) Adding A 100V Line Transformer To The SC480 Amplifier Module

82 Vintage Radio
The "Jelly Mould" STC 205 Mantel/Table Receiver – by Rodney Champness

DEPARTMENTS

2 Publisher's Letter
4 Mailbag
53 Product Showcase
67 Silicon Chip Weblink
90 Ask Silicon Chip
92 Notes & Errata
93 Market Centre
95 Advertising Index

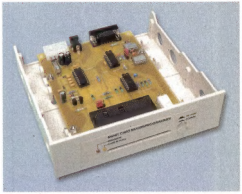

Smart Card Reader & Programmer – Page 22.

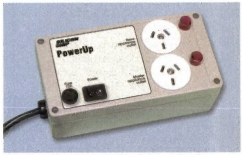

Power-Up: Turns Peripherals On Automatically – Page 32.

"Smart" Slave Flash Trigger – Page 60.

Programmable Continuity Tester – Page 68.

SILICON CHIP

www.siliconchip.com.au

Publisher & Editor-in-Chief
Leo Simpson, B.Bus., FAICD

Production Manager
Greg Swain, B.Sc.(Hons.)

Technical Staff
John Clarke, B.E.(Elec.)
Peter Smith
Ross Tester
Jim Rowe, B.A., B.Sc, VK2ZLO
Rick Walters

Reader Services
Ann Jenkinson

Advertising Enquiries
Leo Simpson
Phone (02) 9979 5644
Fax (02) 9979 6503

Regular Contributors
Brendan Akhurst
Rodney Champness, VK3UG
Julian Edgar, Dip.T.(Sec.), B.Ed
Mike Sheriff, B.Sc, VK2YFK
Philip Watson, MIREE, VK2ZPW
Stan Swan

SILICON CHIP is published 12 times a year by Silicon Chip Publications Pty Ltd. ACN 003 205 490. ABN 49 003 205 490 All material copyright ©. No part of this publication may be reproduced without the written consent of the publisher.

Printing: Hannanprint, Noble Park, Victoria.

Distribution: Network Distribution Company.

Subscription rates: $69.50 per year in Australia. For overseas rates, see the subscription page in this issue.

Editorial & advertising offices:
Unit 8, 101 Darley St,
Mona Vale, NSW 2103.
Postal address: PO Box 139,
Collaroy Beach, NSW 2097.
Phone (02) 9979 5644.
Fax (02) 9979 6503.
E-mail: silchip@siliconchip.com.au

ISSN 1030-2662

* Recommended and maximum price only.

PUBLISHER'S LETTER

Digital TV is a complete failure

Hands up all those readers presently watching digital TV broadcasts. Not very many of you, are there? That's probably why there weren't any protests when the ABC announced the end of its childrens' and youth digital channels (Fly TV and ABC Kids). Nobody was watching them anyway. Who cares?

The fact is that if the Government's timetable is adhered to, all the analog TV stations will cease broadcasting in five years' time, in 2008. Bit of a problem that. In fact, I don't know of anyone who has actually spent the $600 or so required to buy a digital TV decoder box. So my entire circle of friends and acquaintances won't be watching much free-to-air TV in a few years' time.

Apparently, little more than 1% of Australian households have digital TV. Quite a few people might take up Pay TV but a large proportion of the Australian population does not have that option. So will all the rest lose their access to TV broadcasts in 2008? I don't think so.

In reality, there has been little reason at all for any one to purchase a digital decoder because there is no new programming (apart from the abovementioned killed-off ABC services). The Seven, Nine and Ten networks have been concentrating on digitising their networks and currently offer a low-quality digital signal in tandem with their analog channels. Soon they are required to offer HDTV signals and having seen test broadcasts on large screen sets, I can report that they look very, very impressive. But large HDTV sets will be very, very expensive as well.

Actually, we came up with the only other reason to buy a digital TV decoder back in April 2001, when we reviewed the Thomson DTI352TH set top box. If you have analog reception plagued by ghosts, noise and interference, a set top box can make a major improvement. But the much-vaunted multi-viewing broadcasts with different camera angles on sports programs have yet to eventuate. It's all been a big fizzer. And prices have dropped only marginally, if at all.

So where to now? Senator Richard Alston, our esteemed Communications Minister, is presently thrashing around, lambasting the ABC for dropping out of the race, but there is not lot else he can do. He can see that he and the Government are going to have a lot of egg on their collective faces.

Unless the cost of digital decoder boxes drops markedly and new digital channels or features become available, digital TV will continue to have very poor market penetration in Australia.

All of this was predicted years ago of course, in this magazine and in the general media. So you can keep on happily watching your analog TV, safe in the knowledge that it will be there for years to come.

Leo Simpson

PS: unfortunately, we have had to increase our cover price this month. It's our first price rise in three years.

THiNK outside the MOTHERBOARD

Thin Client Terminals

Cat 1149

A really nice, VERY small footprint computer utilizing the Eden 533 Mhz CPU and an ITX form factor motherboard. Requires hard drive, Memory and CD/DVD. A very compact desktop solution
Cat 1149-7 $559

Cat 1150-7 This tiny and attractive embedded computer system will operate from a 12-volt supply making it ideal for mobile or remote location use **$749**

Cat 1133-7 This very fast serial terminal has two high-speed 460K-baud serial ports. The provision of a Centronics port allows the connection of a standard parallel printer **$549**

Cat 1134

Cat 1134-7 A colour, Ethernet TCP/IP terminal designed for use in UNIX networking environments **$579**

Cat 1144-7 A thin client terminal suitable for Linux using the LTSP (Linux Terminal Server Project)
see www.ltsp.org **$829**

Cat 1215-7 This is a Windows Based Terminal, integrated in an LCD monitor. It operates under Windows CE, and is suitable for both NT server and Unix host **$2599**

Cat 1214

Cat 1214-7 This is a Windows Based Terminal, operating under Windows CE, that is suitable for both NT/2000 server and Unix host. It supports both the Citrix ICA protocol as well as Microsoft's RDP **$999**

Cat 1233-7 Remote management software for Windows Terminals **$369**

Training-OnLine

If you need a value-for-money training solution then check out this well established company. T.O.L. offers a comprehensive range of quality courses at prices that students will appreciate. On line now at.....**www.tol.com.au**

3 ISA Slots on a P4 Motherboard!

Don't throw away your ISA equipment-Upgrade to this fully featured P4 industrial ATX board **Cat 17078-7 $999**

Cat 17078

Low Profile PCI Cards

Cat 1150

Cat 1133

Cat 2866-7 USB 2.0 3 port 480 Mbps **$89**
Cat 2837-7 1 port RS232 (serial) **$85**
Cat 2850-7 1 port RS232 (serial) with re-mappable ports **$109**
Cat 2838-7 2 port RS232 (serial) **$99**
Cat 2839-7 4 Port RS232 (serial) **$405**
Cat 11347-7 Ethernet Card 10/100 **$43**
Cat 2992-7 FireWire Card **$99**
Cat 2840-7 Printer Card, 1 port **$94**
Cat 2841-7 Printer Card, 2 port **$123**
Cat 2842-7 2 x Serial, 1 x parallel Card **$119**

Cat 11347

Cat 2840

Foreign Language Keyboards - $69ea

Cat 8989-7 Chinese/US
Cat 8991-7 UK English **Cat 8992-7** Italian
Cat 8994-7 French **Cat 8995-7** Greek
Cat 8996-7 Czech **Cat 8993-7** German

IP addressable Network Camera

Cat 3487-7 $669

Cat 3487

Laser Barcode Scanners

Performance handheld Laser Scanners at CCD prices!

Cat. 8866

Cat 8866-7 This robust, wide-mouthed scanner offers laser performance for only **$329**

Cat 1008039-7 Style and performance! A really good-looking Keyboard Wedge Laser scanner with multiple interfaces. Just change the cable and you also have USB or Serial interfaces **$399**

Cat 1008085-7 This Omni-Directional scanner is similar in function to the supermarket type. Its small footprint makes it ideal where counter space is at a premium. Standard interface is K/B wedge, but a simple change of cable gives you USB or Serial connectivity **$1059**

Cat 1008085

Do you have Software with base address problems?

Then try this dual RS232 PCI Expansion Card with Remap to DOS. Suits Windows 3.1/95/98/NT/2000 & XP **Cat 2826-7 $159**

Video Signal Conditioner

Stabilizes video signal when recording **Cat 3460-7 $169**

PCMCIA to Serial

Add 2 high-speed serial ports to your mobile computer **Cat 2722-7 $269**

Watch Dog Timer Cards

Apply either a software reset or power reset to your computer in the event of a "lockup"; ideal for remote installations.
Watch Dog = software reset
Watch Dog 2 = power reset.
Cat 17050-7 Watch Dog 2 ISA **$399**
Cat 17044-7 Watch Dog ISA **$165**
Cat 17070-7 Watch Dog PCI **$332**
Cat 17076-7 Watch Dog 2 PCI **$649**

Cat 17050

Cat 17070

Easy Transfer Bay

Cat 2857-7 Use your spare floppy drive bay to provide front access for FireWire, USB (1.1) and Serial, plus an Audio in and Audio out (RCA) **$89**

Cat 2857

HALF PRICE BITS

Until end July 2003 or... ...while stocks last!

VGA, AGP x 4 Hulk V Geforce 2, MX400
Cat 3483-7 Normally $159 NOW ONLY $79

Infra Data Suite and Serial IR port for PDA and mobile phone
Cat 8912-7 Normally $231 NOW ONLY $99

Smart Media memory writer
Cat 6655-7 Was $99
NOW ONLY $49

Mobile SCSI Hard Drive kit
Cat 6613-7
Was $89 NOW ONLY $44.50

Removable SCSI Hard Drive kit
Cat 6327-7 Was $192 NOW ONLY $96

MP3 player without CF card
Cat 3454-7 Was $389 NOW ONLY $189

Multi PC Controller PS/2 AT
Cat 11631-7 Was $957 NOW ONLY $449

Digital Satellite TV card with CI
Cat 3510-7 Was $459 NOW ONLY $219

Cat 6655

Cat 6613

MicroGram Computers

Ph: (02) 4389 8444 FreeFax: 1800 625 777 **info@mgram.com.au**

Vamtest Pty Ltd trading as **MicroGram Computers** ABN 60 003 062 100. 1/14 Bon Mace Close, Berkeley Vale NSW 2261

All prices subject to change without notice. For current pricing visit our website. Pictures may be indicative only.

See all these products & more on our website...www.mgram.com.au

SHOPBOUNGRAM703

MAILBAG

Motherboard capacitors need to be tiny

I read your article about the explosive motherboard capacitors, in the May 2003 issue. Unfortunately, I read it a little too late. I manage the network for an Internet cafe and I recently (a month ago) diagnosed the capacitor problem on 20 of our motherboards. You have covered the problem but not enough about the solution.

You mentioned the low-ESR capacitors you can buy from RS but unfortunately they were all too big to fit on these boards (about 20 capacitors need replacing per board). I imagine most motherboards will have a similar problem as everything is squished in as close as possible.

After many interstate phone calls and confused sales people, I found a suitable replacement. The Rubycon ZLH series provide a range of 1500µF capacitors which I managed to be able to get in an 8mm package. See **www.tenrod.com.au** for contact details. The capacitors cost 60c each but minimum order quantities are a problem.

Aaron Russell,
via email.

Mars Rover should have dust wipers

After reading the article about the Mars Rover mission, I almost fell off my chair when I read that the mission must ultimately end after 90 days because of dust accumulating on the solar panels. There might be other reasons why the mission will not last forever but it certainly should not be because of a bit of dust.

Why are there no simple dust wipers to keep the panels clean? Ultralight wiper arms carrying carbon fibre bristles, similar to those used to get the dust off LP records, could avoid a billion dollar project becoming useless after only 360 duty hours. I don't see much chance of it discovering anything significant in the 13km it is proposed to travel in that time anyhow.

The wipers would move slowly (1cm/s) across the panels once an hour to avoid dust build-up and run a little bit over the edge so the collected dust could be removed from the bristles. Only tiny motors would be sufficient for this purpose and they would only be needed for about one minute per hour. Their power consumption would be negligible compared to the power gain achieved by keeping the panels as clean as they were on day one.

The six motors and wiper arms would probably mean an extra 500-1000g in weight depending on how ultra-light they can be built. I have sent a letter to NASA making this suggestion.

If NASA can't fit the wipers in time for the second launch at least, I honestly believe the second Rover should be postponed until the next opportunity in 26 months, instead of blasting useless billions into the sky.

Peter Mendelson,
Coffs Harbour, NSW.

Comment: that's sounds like an excellent idea, Peter. Bloody brilliant, in fact! Obviously, NASA needed some Aussie ingenuity long before this.

Neat process for plastic boxes

I'm not sure if it is correct etiquette to give free plugs for advertisers in your magazine but I am pleased to have found a solution to a problem with plastic boxes.

I have been looking for a good way to cut rectangular holes in plastic boxes, accurately aligned with the components that need to fit through the holes. I asked several experts but the job seems to be surprisingly difficult. For businesses specialising in signs, the box was too high, while for those specialising in furniture, it was too small. One could accept files only in a very old version of CorelDraw.

Some people seem to be able to do it successfully with a mini drill. When I tried this and when I showed my handiwork to my friends, they asked, "Why did you use a chainsaw to make such a tiny hole?"

I have now developed a procedure that works impressively well whereby the holes are cut by my PC board maker, Instant PCBs. I pretend that my box is a (peculiar) PCB and prepare the artwork for the hole(s). I send the file by email and the box by snail mail to Instant PCBs. They send back the box with very clean, very professional holes, located to PCB precision.

Because we both use PCB software, then any shape that can be cut into a PCB can be cut into the box and I don't need to learn the idiosyncrasies of yet another software product. And there is no hint of a chainsaw!

Keith Anderson,
Kingston, Tas.

Comment: inquiries about this process can be directed to George at Instant PCBs. Phone (02) 9974 1189 or email ***instantpcbs@aol.com***

Pointers for home entertainment PCs

I have some feedback on the "Silent Running" article in the April 2003 edition of SILICON CHIP. The author of the article mentioned using a silent-running PC as part of a home entertainment system (MP3s and DVDs). The following information may be helpful to others, as I have done some experimenting in this area.

To play DVDs successfully with no jumping or "micro freezes" with a software DVD decoder (such as WinDVD or PowerDVD), a 1GHz minimum processor is required regardless of type (AMD, Intel, etc) as pure maths processing power is needed (950MHz produces some jitter). If a hardware decoder card is being used, then processor power is irrelevant.

The minimum graphics requirement is an Nvidia TNT2 32MB card or similar and it must be an AGP version, as

the PCI slot cannot provide enough data transfer speed. Preferably, the graphics card should have a TV output and you should use a TV-out interface program that enables the use of keyboard shortcuts to enable/disable the TV out, as the monitor usually produces no picture when TV out is being used. The TV is generally in a different room as the computer fan is too noisy. I use "TV Control Center" (TVCC 2000) or "TV Tool".

When decoding DVDs, the processor operates at 100% and the temperature can rise considerably after awhile, so efficient heatsinking is required. To play MP3s successfully (no skipping or jumping), you need at least a 133MHz Pentium or 586 processor. I found it best to use a DOS program (MPX Play – available free from the web), as the boot time of the computer is much reduced.

If you must use Windows (to run Winamp, etc), it is best to use Windows 95 as the program overhang and thus boot time is reduced – as well as lower system requirements. If you use Windows 95A instead of Windows 95B, there is a 2GB limit on the size of the hard drive (as well as no access to FAT32 formatted drives greater than 2GB).

If the processor speed is less than about 500MHz, then the age of the motherboard may come into play if a hard drive greater than 8GB is used (some motherboards have an upgradeable BIOS though). If the size of the disk drive is an issue, it can be partitioned into 2GB or 8GB partitions, or you can use the appropriate "boot loader" or "disk master" program to enable oversized disk drives to be used. The VIA motherboard mentioned in the article does not have this problem.

Philip Chugg,
Rocherlea, Tas.

Halogen lamps waste resources

I was pleased to see that at last someone has raised the issue of the proliferation of low voltage halogen lamps. While I totally agree with what you have said in the June 2003 "Publisher's Letter", you overlooked one important aspect. That is the huge waste of natural resources (copper and steel) that goes into the heaters, sorry, transformers to power these things.

Sure, low voltage halogen lights may be "trendy" and offer interior designers more creative answers but a plain old incandescent light is cheap, technically dead simple, and only needs a pair of wires connected to the 240VAC mains to operate.

Leon Williams,
via email.

Filter for sound card interface

I am writing in response to the letter in the "Ask Silicon Chip" pages in your April 2003 issue about the noisy sound card interface. I also built the EA project and found it very noisy. The noise was coming in on the 5V supply from the computer.

The sound card interface has a filter capacitor on the supply line but needs some series reactance to be more effective. I experimented with various chokes in series with the 5V supply from the computer but found that a 1kΩ resistor reduced the noise to an (almost) acceptable level without reducing the voltage too much.

Mike Hammer,
via email.

Old wireless sound deficient in bass

I have just read your "Ask Silicon Chip" (March 2003) suggestions in response to reader R. W.'s query (Reproducing Old Wireless Sound) about how to reproduce a "wireless" sound from the 1930s for his amateur theatre company.

Your comments make a lot of sense but if I may, might I suggest in addition to limiting the top-end frequency response to 5kHz as you say, you would also impart a lot of realism to the "wireless" sound by rolling off the bottom-end response starting at, say, 300Hz. The old speaker transformers in the 1930s radios were fairly hopeless at the low end too and this I believe was a major limiting factor for reproducing low audio frequencies in the average home wireless.

Stan Hood,
Christchurch, NZ.

Comment: the bass response depended more on the cabinet than the loudspeaker transformers – some were re-

The Tiger comes to Australia

The BASIC, Tiny and Economy Tigers are sold in Australia by JED, with W98/NT software and local single board systems.

Tigers are modules running true compiled multitasking BASIC in a 16/32 bit core, with typically 512K bytes of FLASH (program and data) memory and 32/128/512 K bytes of RAM. The **Tiny Tiger** has four, 10 bit analog ins, lots of digital I/O, two UARTs, SPI, I^2C, 1-wire, RTC and has low cost W98/NT compile, debug and download software.

JED makes four Australian boards with up to 64 screw-terminal I/O, more UARTs & LCD/keyboard support. See JED's www site for data.

Intelligent RS232 to RS485 Converter

The JED 995X is an opto-isolated standards converter for 2/4 wire RS422/485 networks. It has a built-in microprocessor controlling TX-ON, fixing Windows timing problems of PCs using RTS line control. Several models available, inc. a new DIN rail mounting unit. JED995X: $160+gst.
Www.jedmicro.com.au/RS485.htm

$330 PC-PROM Programmer

This programmer plugs into a PC printer port and reads, writes and edits any 28 or 32-pin PROM. Comes with plug-pack, cable and software.
Also available is a multi-PROM UV eraser with timer, and a 32/32 PLCC converter.

JED Microprocessors Pty Ltd
173 Boronia Rd, Boronia, Victoria, 3155
Ph. 03 9762 3588, Fax 03 9762 5489
www.jedmicro.com.au

ally quite good, particularly the bigger console radios. However, there would not be much output, if any, below 100Hz.

Vintage radio speaker repairs

The Vintage Radio column in the April 2003 issue mentioned repairing tears in speaker cones. I've used another method for some time now and had success every time.

What I do is cut a piece of supermarket shopping bag to the correct shape to cover the torn cone area (this works if it's basically intact, with no pieces missing) and glue it to the rear of the cone. The glue I use is a "never drying" vinyl floor adhesive which was made by Carson Adhesives in Brookvale who recently sold out to Bostick. I believe they are continuing the Carson brand of adhesives.

The type number is Carson 698 and it is also very useful for "doping" and also repairing silverfish damage to the outer surrounds of conventional paper/cloth surround speakers, as it bonds to paper very well. "Doping" the outer surround makes all conventional speakers much "tighter" in their sound and improves the low-end response.

I've even "doped" old MSPs and Magnavoxes and the improvement in the sound is just amazing.

Brad Sheargold,
via email.

DVD aspect ratios are stupid

Back in the February and March 2001 issues of SILICON CHIP, I read with great interest the letters in "Mailbag" about aspect ratios, even though I didn't understand it all. Because I then didn't own a DVD player, I forgot about it. That is, until yesterday when I went out and bought a new TV (68cm, 4:3 ratio) and a DVD player.

I keenly put my first disc in, pressed PLAY and was confronted by a stupid-looking narrow strip of colour across the middle of the screen covering about 50%, with very large black bars top & bottom. This was 2.35:1.

Now I may be dumb but I have three questions. I can understand the reasons behind 16:9 (mind you the TV sets are still quite expensive, because you need a reasonably large one to look good) but why on earth would anyone produce a DVD aimed at the home user in a 2.35:1 format? I believe not one TV on the market can display this properly, without black bars.

It seems like another case of big companies telling us what we are going to get, even though the vast majority of us still own and buy 4:3 sets. I won't even mention the cropping they do to "reformat" to some ratios.

Also some discs have a section saying "16:9 transfer dual-layered format layer transition may trigger a slight pause". Does this mean it can also be played in 16:9, without stretching everything out of shape?

Is there a way of ripping the disc, then reformatting and burning a new copy to at least 16:9? It doesn't look too bad on a 4:3 set.

Anyway I'd better stop writing, I'm getting angry again!

Neil Smith,
via email.

Comment: we don't blame you for getting angry. 2.35:1 is such a stupid ratio. Nor are there any practical answers to your questions.

Batteries are sometimes preferable

While I agree with the broad sentiments expressed on batteries in the Publisher's Letter in the May 2003 issue, I have to disagree with your qualified suggestion to use rechargeable batteries or plugpacks wherever possible.

I provide toy repair services to a number of organisations in Victoria which serve physically and intellectually disabled children. Battery-operated ("switch") toys, often sophisticated and expensive, are used extensively for therapy, intellectual stimulation and entertainment. Many of these toys incorporate motors, LEDs, LCDs, logic and sound modules, often imposing a substantial current drain. However, battery operation is a valuable feature, permitting use of toys both indoors and outdoors, independent of AC mains supplies.

Operation from plugpacks presents potential safety hazards in a classroom environment. Extra supervision would be required to cover disabled children who habitually chew through the insulation of low-voltage leads, and to monitor plugpacks for inadvertent overheating and possible fire. In addition, there are traffic hazards where leads are festooned around tables and wheelchairs.

Finally, plugpacks may not be electrically compatible with the power supply (or multiple supplies!) required for toys, leaving batteries the only option.

However, there are a lot of questions surrounding battery use. For example, why do toy manufacturers advise "Do not use rechargeable batteries" on the packaging? Does this only refer to nicads? Despite accompanying graphics, battery descriptions such as "super heavy duty", "heavy duty", "long life", and "general purpose" are confusing to consumers.

What about "rechargeable" batteries (eg, nickel-cadmium and other "exotics" such as NiMH)? I assume that safety concerns for children arise from breaching of the case and in the case of nicads, release of highly toxic cadmium and alkali which may cause eye damage and skin burns. This may result from unintended overcharging but perhaps elevated temperatures or mechanical abuse can contribute? Manufacturers also warn that rechargeable batteries should be kept out of the reach of children. This is not necessarily controllable with some children!

Your suggestion to use apparently "dead" batteries in low current devices such as clocks and remote controls is sensible. I do this regularly. However, many toys and other devices are voltage sensitive and may present operating problems. I hope also that people are not encouraged to reuse "old" batteries in smoke detectors! If the battery reuse option is pursued, use of a suitable (loading) battery tester rather than a mere voltage check is absolutely vital.

Brian Graham,
Mt Waverley, Vic, SC

Photo: Infineon

If you have an E-tag for the tollway, a micro-chipped pet or a late-model car with an immobiliser key, then you're already using radio frequency identification (RFID) technology. But this is only the start. Over the next few years RFID technology will start to replace bar code labelling systems. It might even be used to identify people! The implications are enormous. So what is RFID and how does it work?

Radio Frequency Identification (RFID) has been around in one form or another since World War II. Although it has been used in niche industrial sectors for many years, the increasing desire for greater efficiencies in supply logistics have really pushed the development and use of this technology.

An RFID system consists of a reader and transponders. Transponders (derived from the words "transmitter" and "responder") are attached to the items to be identified. They are often called "tags".

Just like a bar code, a transponder tag carries data about its host. When interrogated by a reader, it responds with that data over a radio frequency link. The transponder could be really simple, like those in clothing price tags, consisting of just an antenna and diode. When irradiated, the diode rectifies the incoming carrier and the frequency-doubled signal is radiated back to the reader which responds with an alarm if you try to leave the store without paying for the product.

By PETER SMITH

These days, the generic term "RFID" is used to describe an entire range of dedicated short-range communication (DSRC) systems.

This article does not attempt to describe all RFID devices and technologies. Instead, we will focus exclusively on RFIDs used in identity tagging and

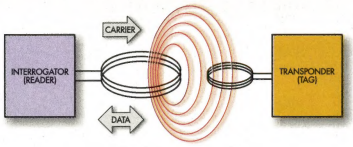

Fig.1: a basic RFID setup consists of a reader (or interrogator) and transponder. Low frequency systems rely on inductive coupling to provide transponder power.

closely associated areas. Let's begin by dividing the subject into two broad categories: active and passive transponders.

Passive Transponders

Passive transponders do not have an in-built power source; they are powered entirely from the magnetic/electric field of the reader's antenna. This energy is used to power on-board electronics as well as to transmit data back to the reader.

Because of the close coupling requirements of the reader and programmer, reading distance is limited. It varies from a few centimetres to several metres, depending on the transmission frequency, power level and other factors that we'll examine shortly.

Passive tags come in a huge variety of shapes and sizes, depending on their application. They can be made to withstand extremely harsh environments. Without a battery to run flat, they can last indefinitely.

Active transponders

Active transponders are battery-powered and are generally designed for communication over greater distances than their passive counterparts. On-board power allows higher data rates and better noise immunity but active transponders are bigger, cost more and have a finite life.

The E-tag for Sydney's tollways is a good example of an active tag. Similar systems in Europe operate in the microwave spectrum, which implies very high data transfer rates. In fact, the European systems allow you to speed through the tollgates at up to 160km/h and are still able to successfully bill you for the trip!

RFID advantages

The fact that RFID is "contactless" is only part of its attraction. RFID tags carry much more data than bar codes. For example, a typical bar code might be limited to 20 characters, whereas tag memories can hold 512 bits (or lots more) of data.

Importantly, the memory on some tags can be both read and written many times over, allowing "on-the-fly" data updates. Simpler tags that contain "WORM" (write once read many times) memory are also in use.

Unlike bar coding schemes, "smart" tags include computational electronics, enabling encrypted, high security information exchange. This can be seen in action in the new contactless credit cards and "electronic purse" systems already in use throughout Europe.

The invisible medium of radio also means that tags do not need to be "line-of-sight" to be read. With help from the on-board electronics, it also allows multiple tags (within reader range) to be read "simultaneously".

Imagine how all this might ultimately change your shopping experience. You could fill your trolley and wheel it directly out of the supermarket. Invisible readers at the exits would scan all of your items and charge your "smart" credit card while it's still in your wallet (or purse)! No waiting at the checkouts – wouldn't that be great?

How passive systems work

Passive tags usually consist of just a single IC and an antenna (coil). Currently, most passive tags operate below 100MHz and rely on the magnetic field

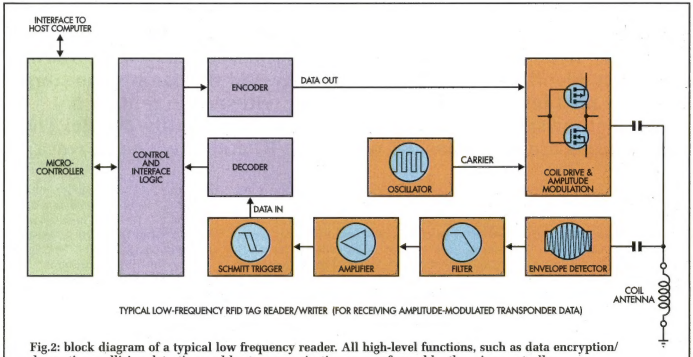

Fig.2: block diagram of a typical low frequency reader. All high-level functions, such as data encryption/decryption, collision detection and host communication are performed by the microcontroller.

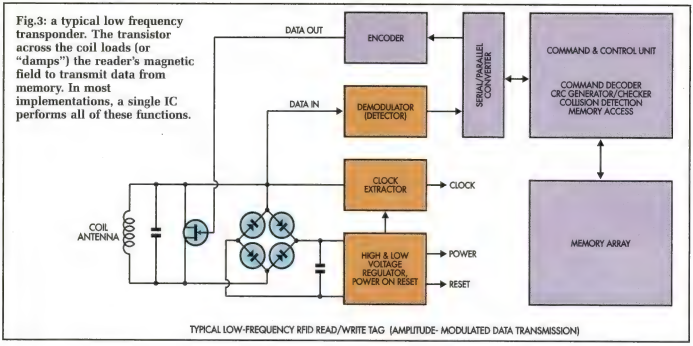

Fig.3: a typical low frequency transponder. The transistor across the coil loads (or "damps") the reader's magnetic field to transmit data from memory. In most implementations, a single IC performs all of these functions.

produced by the reader for both power and communication.

The reader generates a carrier signal and this induces a voltage across the coil of the tag. This voltage is rectified and filtered to become the power supply for the IC. Some tags also divide down the carrier signal and use it as the clock for on-board logic, whereas others generate their own clock signal.

Tag transmission

Essentially, tag data transmission is achieved by switching a low resistance across the antenna coil. Loading the coil in this way causes a corresponding dip in the peak voltage across the reader's coil. In other words, the change in voltage across the tag's coil is reflected back to the reader's coil. This is often referred to as "backscatter".

The serial data stream from ROM (and/or EEPROM/FRAM) memory does not directly drive the coil-loading switch. Instead, the switch is driven by a low-frequency clock source. This effectively superimposes a weaker "subcarrier" on the main carrier signal. Modulating this subcarrier performs actual data transmission.

Without going into lengthy technical discussions, we can tell you that the modulation method may be ASK (amplitude shift keying), PSK (phase shift keying) or FSK (frequency shift keying). Serial data is typically Bi-phase, Manchester or Miller-encoded before transmission.

Reader reception

In order to receive tag data transmissions, the reader's antenna signal is first processed by analog front-end circuitry. Its main functions are to remove the carrier signal and then amplify the (much) smaller sub-carrier.

The resultant signal from the envelope detection, filtering and amplifying stages is cleaned up with a Schmitt trigger and pumped into a digital logic block, where the original data is reconstructed through a demodulation and/or decoding process.

Typically, all of these functions are performed by a single IC, supported by a few external (passive) components and perhaps an antenna power amplifier. Higher level functions, such as data encryption/decryption, collision detection and host interfacing are usually performed by a microcontroller, which is interfaced to the reader IC via a simple serial or parallel interface.

Reader to tag transmission

For two-way (read/write) systems, the reader must also be able to transmit data to the tag (to update the EEPROM/FRAM). This is typically achieved by amplitude, pulse-width or pulse-position modulation of the carrier signal.

In its simplest form, transmission to the tag is performed by switching the carrier signal on and off (100% amplitude modulation). A "gap detect" circuit in the tag serialises and demodulates the "gaps" and "no gaps" to reconstruct the original data.

Once a complete data frame is received, it is checked for validity (using a CRC polynomial). If sufficient power is available, it is then committed to memory.

In some systems, the carrier is not switched on and off but is modulated at a particular "depth" (about 10%). This makes more power available for

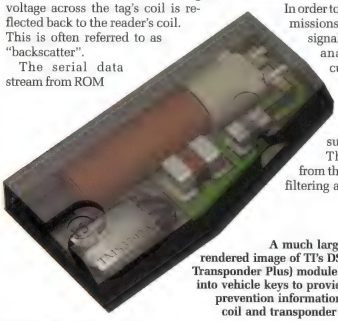

A much larger-than-life computer-rendered image of TI's DST+ (Digital Signature Transponder Plus) module. These are embedded into vehicle keys to provide sophisticated fraud prevention information. The long ferrite rod coil and transponder IC are clearly visible.

A collection of 14.35MHz tags and labels with TI's "Tag-it" transponders hidden inside. Photo: Texas Instruments

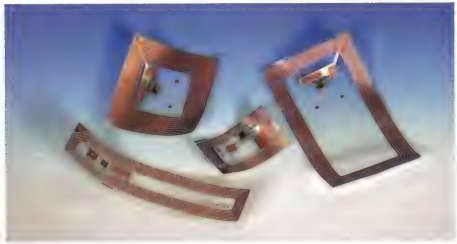

This is what's inside the tags and labels. In bare format, the transponders are referred to as "inlays". Photo: Texas Instruments

Reader size varies according to application. Miniature units with built-in antennas are available, whereas store-front models need walk-through antenna loops. Here are two semi-portable (14.35MHz) readers from TI. As indicated in the foreground, these models are designed for ID card use. Photo: Texas Inst.

tag use, extending range and enables smaller tag antennas to be used.

Frequencies and antennas

The most common frequencies in use for passive RFID systems are 125kHz - 134.2kHz and 13.56MHz, with a few operating up in the 900MHz and 2.45GHz regions. The frequency of operation has a very big impact on system design, configuration and cost, and it's all to do with "near" and "far" fields.

Antennas radiating an electromagnetic field generate what is known as "near" and "far" field components. Most passive transponders rely on inductive coupling, so they utilise the "near" field component. The "near" field signal decays as the cube of distance ($1/r^3$) from the antenna, whereas the "far" field signal decays as the square of the distance ($1/r^2$) from the antenna.

As you can see, the use of inductive coupling and "near" field severely limits the reading distance. However, this can be desirable, as it allows engineers to tightly control the radiating pattern and reach of the reader's field. To borrow from our earlier supermarket example, it is possible to ensure that shoppers are only charged for what is in their trolley (and in their pockets!).

Low frequencies and small tag sizes are two other important reasons for using the "near" field. For example, consider the size of conventional ¼-wave dipoles for 125kHz (or even 14.35MHz) that would be needed for "far" field communication. These would need to be 600m and 5.23m long, respectively; much too big for integration into a pea-sized transponder or credit card!

For inductive coupling, the antenna (we use the term loosely) must be resonant at the chosen carrier frequency. This is achieved by adding some parallel capacitance (for the transponder) or series capacitance (for the reader) to a known value of antenna inductance.

Size does matter

Reader and transponder antenna size is a critical factor in "near" field systems. As the tag size is generally fixed (in credit card form factor, for example), the reader side becomes the variable. Many manufacturers quote a "rule of thumb" reading distance roughly equivalent to the diameter of

the reader's antenna.

However, it's important to note that factors such as antenna orientation, radiated power and environmental conditions all have significant effects on reading distance.

For 125/134.2kHz systems, the antennas (OK, the coils!) are constructed with many turns of wire, often wound on ferrite cores to reduce size. Transponder coils can be as small as a cm or two, making them ideal for animal tagging (implants) and car security systems. Data transfer speed is typically between 2 - 10kb/s.

By contrast, 14.35MHz transponder antennas require less than 10 turns (the readers may have only one turn), which is easily printed as a foil pattern for tag inlays or etched directly onto PC boards. This frequency is widely used for credit cards, identity tags, anti-theft labels and bar code replacements. Data transfer speed at this frequency is up to 100kb/s.

UHF/microwave systems

Passive systems that operate in the 900MHz and 2.45GHz regions are also in use. The considerably shorter wavelength of these frequencies allows the use of dipole antennas (usually 1/8-wave) and the "far" field emissions of the reader.

Reader range is considerable longer (>3 metres) than for lower frequency systems. However, microwave frequencies are highly directional and readily absorbed by organic tissue, which makes them unsuitable for many applications.

High frequency tags also require precision manufacturing and more expensive electronics than their lower-frequency counterparts but they can support data rates of 2Mb/s or more.

RFID in the news

High profile manufacturers and retailers like Proctor & Gamble, Gillette, Wal-Mart and Tesco are currently trialing RFID technology. They're employing "smart" shelves that keep track of stock using transponder tags. When stock levels drop too low, the shelves automatically notify staff.

Benetton have embraced the technology, sewing Philips I.CODE tags into thousands of their retail products. The company now has the ability to track the tagged garments even after purchase, which is proving to be a somewhat controversial ability.

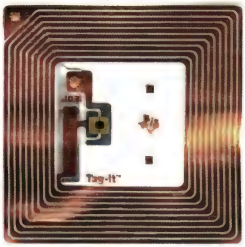

Close up of a Tag-it inlay. The tiny black dot is the transponder IC, with the antenna coil occupying most of the remaining space. These inlays are small and highly flexible and can be attached to almost anything. Photo: Texas Instruments

The London public transportation system is installing a smart ticketing system that uses contactless smart cards. This is reputedly the largest project of its kind to date, with 80,000 staff already issued with Philips MIFARE cards.

Michelin engineers have developed RFID transponders that can be embedded into their tires, to store information such as maximum inflation pressure, tire size, etc. It also allows tyres to be associated with Vehicle Identification Numbers.

240,000 books and 60,000 CDs and DVDs in Vienna's new main library have been equipped with RFID transponders. Self-service terminals in the library make checkout completely painless.

Mobil has teamed up with Texas Instruments to create a hybrid active & passive transponder system for petrol purchase. Based on TI's TIRIS system, it enables thousands of motorists in the US to fill up without the need for cash or even a card. Transponders in both the car and the driver's key ring make a positive ID as soon as the vehicle pulls up to the pump. Now all they need is a robot to fill the tank...

Where to from here?

Despite all this activity, there are still some wrinkles to be ironed out before you'll see RFID in use in your local supermarket. The lack of international RF standards (bands and power levels) is frustrating development. In addition, the cost per tag is still prohibitive for use on low-cost products.

The bean counters tell us that tags must be priced at less than 1% of the products they're attached to. Recent reports indicate prices as low as 10c apiece but that's still too expensive for the frozen peas and baked beans.

On-going research into organic semiconductors might prove to be the ultimate answer. Using this emerging technology, it may soon be possible to "print" transducers just as we currently print barcode labels! **SC**

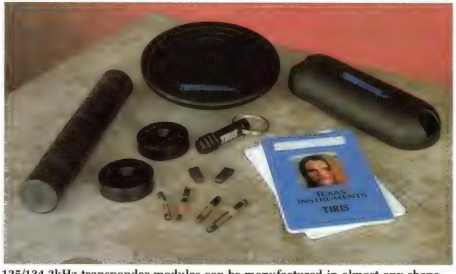

125/134.2kHz transponder modules can be manufactured in almost any shape and size, as demonstrated by this collection. Photo: Texas Instruments

To make solar power workable and cost-effective, there are a few rules to be followed. Much of it is commonsense but some aspects are not obvious, like making sure that battery storage is matched to solar panel capacity. Here, we look at the best approach.

Solar Power for Caravans & Motor-homes: Dispelling the Myths

By COLLYN RIVERS*

THE ENERGY OF SUNLIGHT falling on the more habitable parts of Australia averages 1000 watts per square metre. Only 10% of that can presently be turned into electricity but this is still enough to be useful.

My off-road OKA motor-home runs a 70-litre fridge, multiple halogen lights and an Iridium satphone, all from two 80-watt modules. It has not run out of power in the past seven years. My all-solar-electric home north of Broome runs from an 1800W solar array and has enough energy left over each day to irrigate 150 trees.

Solar energy really can be made to work but there are a few traps that can result in less energy being captured than expected, and even less ability to store and retrieve it.

The most common result is that your storage batteries will run down much sooner than expected.

Worse still, because they are not being fully charged, many expensive storage batteries will expire within a year. The biggest trap relates to solar module output – the industry uses the term 'panels' for assemblies of modules.

Solar modules are curious devices that only produce their claimed output in quite specific applications and 'Standard Operating Conditions' that bear little or no relationship to reality.

Watts ain't necessarily Watts

A watt is defined as one amp multiplied by one volt. To produce 80 watts, a module feeding a system operating at say, 12.8V MUST therefore produce 6.25A.

But Table 1 (which is from the back of a real-life 80-watt module), shows it only puts out 4.6A. The solar module industry is not known for understatement so you can bet that the output is not a tad more.

Here's how the arithmetic is worked out:

Solar modules produce much the same current across a wide range of load voltage. To establish maximum output, the solar industry plots load voltage against current and picks whatever combination gives the highest number.

Physics being as it is, for the module (Table 1) to develop 80 watts at 4.6A, that 4.6A has to be developed with 17.3V across the load.

This is fine if your system runs at 17.3V. Such systems being as rare as sardines that ride unicycles, the only way you can fully utilise an output at 17.3V is via a DC-DC converter that gives more amps at less volts (these are sometimes used in sophisticated large-scale systems), or by driving a load (such as some water pumps) whose output is proportionate to input voltage.

If the load is a 12V charger, the most energy transferable (for the module in Table 1) is 4.6A times (say) 14.5V, ie, about 67 watts. If the load is 12.6V, the most that can be transferred is 58 watts.

Temperature losses

Mono and polycrystalline modules lose about 4-5% of their output for every 10°C increase in temperature.

*About the author . . .

Collyn Rivers, shown here working in his all-solar home north of Broome, WA, is well known as the Founding Editor of Electronics Today International which, in 1976, was proclaimed the 'Best Electronics Magazine in the World' by the Union Internationale de la Presse Radiotechnique et Electronique, and was produced as separate editions in Australia, UK, Canada, France, Holland, Germany, India, and Indonesia.

The rated output is measured at 25°C but this does not refer to the ambient temperature; it refers to the operating temperature of the cells.

Typically, at 25°C ambient, those cells will be around 55°C (under a hot sun) so there goes 12-15% of the output. At 35°C the loss is 16-20%.

In contrast, amorphous technology (Uni-Solar, Solarex Millennium) modules increase their output slightly as temperature increases. In practice, a 64-watt amorphous

If you're planning to get off the beaten track but still want a few creature comforts (like lighting, TV, computers, etc) solar power is the way to go. It's not difficult to install and set up but there are a few pitfalls for the unwary . . .

Table 1: an "80W" solar panel's ratings reveal that the eighty watts is mainly a figment of the manufacturer's imagination (or at least their marketing department's . . .)

Standard Operating Conditions	
P_{MAX} (maximum power)	79.86W
V_{OC} (voltage open circuit)	21.2V
I_{SC} (current short circuit)	5.25A
VP_{MAX} (voltage maximum power)	17.36V
IP_{MAX} (current maximum power)	4.6A
Nominal Operating Conditions	
P_{MAX} (maximum power)	58.0W
IP_{MAX} (current maximum power)	3.9A

module produces the same as an 80-watt module of any other type, once above 36-38°C. But they are about 30% larger.

For any practical purpose (which does not include a 17.3V caravan system at the top of Mt Kosciusko), an 80-watt solar module produces about 58 watts or a bit less, in very hot places. Most modules reveal this but only in the fine technical print.

Many systems fail to deliver because someone (not unreasonably) assumed a module's amperage is the rated output in watts, divided by about 12.0 (volts).

Solar regulators

Interfaced between solar modules and the load, solar regulators ensure that batteries charge as rapidly and efficiently as possible. They also maintain the system at approximately 13.6V, once the batteries are close to fully charged.

The most basic are voltage-sensitive on/off switches. The more complex use pulse-width modulation and incorporate all-but-essential system and battery monitoring (see below).

A solar regulator should be used in every system, except where solar output is less than 0.5% of battery capacity.

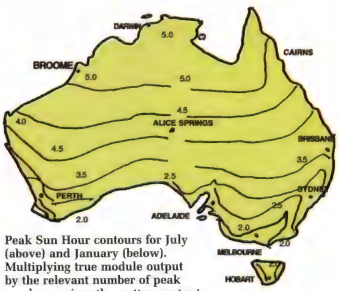

Peak Sun Hour contours for July (above) and January (below). Multiplying true module output by the relevant number of peak sun hours gives the wattage output for one day. There is no need to correct for changes as the sun moves across the sky. These (redrawn) maps are based on Australian Bureau of Meteorology data. (Taken from "Solar That Really Works!" by the author.)

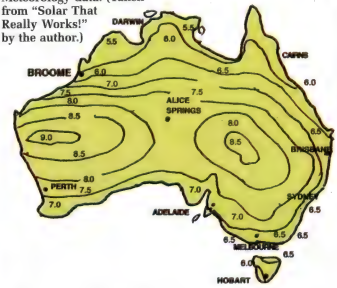

Beware of 'self-regulating' modules. These have insufficient voltage to overcharge a battery and in hot places their temperature loss may be such that they will not charge a battery at all.

Battery traps

Ironically, some of the worst people to ask about batteries are those who work in general electronic disciplines!

The (US) Ample Power company states that, [to understand batteries] "general electronic knowledge isn't enough... even those working in battery distribution channels can't be relied upon to dispense correct and meaningful information".

Deep-cycle batteries in particular are complex mechanisms. A short article like this cannot make you an expert but hopefully it covers the essentials – and may show how some of you are killing batteries right now.

All lead-acid batteries have internal resistance. That internal resistance is described in 'Peukert's Law' (formu-

lated in 1897) which states that the greater the rate of discharge, the greater the internal loss, hence the lower the percentage of charged capacity that can be used.

It's like the inverse of pouring beer quickly into a cold glass – the quicker you pour, the greater the foam and the less the glass is filled. You may want to repeat this experiment a few times (hic).

A battery is charged by applying a voltage across it greater than it already has. The charging rate is more or less proportional to that voltage difference, so it tapers off as the battery gains charge.

Constant voltage charging

If the charging voltage is fixed, then as the battery voltage rises, the charge rate automatically falls. This is how a car alternator/regulator works. It's called 'constant voltage charging'. When used in a car system, it does not and cannot fully charge the battery. It's deliberately designed not to.

Some vehicles are driven for many hours a day (like taxis on shift work) so it's necessary to prevent overcharging. This is achieved by limiting charge voltage to 14.2-14.4V. This corresponds to about 70% of nominal battery capacity, after which the charge rate rapidly tapers off. The battery continues to charge but so slowly that it takes 100 hours or so of non-stop driving to even approach full charge.

If charged at that voltage continuously however, the battery will eventually be over-charged. The charge voltage is therefore very much a compromise. Battery makers say that, with caravans and motor-homes, 65% of full charge is typical and 70% is rare.

This limited charging of car batteries is not a problem for starting. The starter motor is designed to work at the corresponding voltage. Limiting charging to 14.2-14.4V also safeguards electrical components.

The car battery's only major role (apart a voltage reference) is to start the car. If you want to win bets, ask your friends how much energy this needs. The answer usually surprises most people – it's negligible.

The starter motor gobbles 300-400A but typically for less than five seconds. This is about 0.5Ah or what a tail-light draws in about 15 minutes.

The alternator replaces this in a minute or two, by which time the battery is back up to about 65% charge. But from there on the charge rate tapers rapidly.

By 70%, charging has dropped to an amp or two and is falling fast. The battery still continues charging but very slowly. Given long enough it will eventually over-charge but that takes hundreds of hours. For most vehicles, battery charging effectively stops at 70%.

Disaster for house batteries

This charging regime is OK for the starter battery but far from satisfactory if used to parallel-charge a 'house' battery in a caravan or motor-home, not just because of the 70% or so limitation but also because the extra alternator capacity needed to achieve that in reasonable time is unlikely to exist. This can be a problem as it will also affect the starter battery in the same way.

Even the best batteries are progressively damaged if they are frequently discharged below 50% capacity. This then leaves a mere 20% of battery capacity available, if one follows their makers' advice.

In practice, most people discharge their batteries until the fridge stops working, which corresponds to about 80% discharge. Even discharged this deeply, only 45-50Ah can be pulled out of a 300Ah battery charged to 65%-70%. And each time you do it, 0.5% of the remaining battery capacity goes to sulphate heaven.

There are various ways around this. One is to use a 'smart regulator'. Alternator willing, these initially charge at a constant current of up to 25% of battery Ah capacity.

Once past 14.4V or so, charging is cut back to about 10% of Ah capacity to allow the charge to be absorbed. This is usually followed by a 'float' level of about 13.6V. There are several really good smart regulators now available in Australia.

Another solution is to accept the limitations of the charging system and switch to gel cell or AGM batteries.

Medium caravans (three-way fridge)

Column A Device	Column B Watts	Column C Hours/day	Column D Watt/hours
Fluoro Lights (3)	36	3	108
Radio	15	1	15
Portable TV (14-18-inch)	70	2	140
Fridge			700
Appliances	250	0.5	125
Water pump (12V)	48	0.25	12
Fan	20	2	40
Total of column D			1140
Plus 10% for system losses			114
TOTAL			**1254**

Table 2: typical daily power requirement for a medium-sized caravan. Of course, individuals may vary significantly from these figures but they give you an idea of where to start with your own power requirements. Add a microwave oven and you'll blow these figures right out of the water!

Both charge close to 100% from only 13.8-14.1V and can be discharged more deeply than conventional batteries with less internal harm.

Yet another way, adopted by many caravanners and a few motor-home owners, is not to rely on vehicle charging at all. Their house battery charges from solar alone.

If you drive more than a couple of hours most days, it pays to use vehicle charging, especially if you add a smart regulator. If you don't, it doesn't. (Note: smart regulators cannot be used with today's electronic engine management systems.)

Battery monitoring

Lead acid batteries store energy in the form of chemical reactions between lead plates and a water/acid electrolyte. These reactions are extremely slow so little is gleaned from instantaneous voltage measurements except that the meter is working.

A close to 'flat' battery will present as close to fully charged after a few minutes on high charge – an otherwise well-charged battery will present as 'flat' for some time after running a microwave oven. Hydrometer readings are a little better but not much.

The only meaningful indication is the voltage after the battery has rested literally for three days (and even then the error may be 15%).

A very much better way is by measuring what goes in and what comes out and deducting a bit for system losses (but even this is inaccurate unless corrected for Peukert's Law). This function, plus many others, is now built-in to most up-market solar regulators. These cost around $300 upwards.

Supplementation or self-sufficiency?

There are two main approaches to using solar power. They may not seem that different but the technical implications are profound, as is the effect on battery longevity.

The first approach is to use solar to supplement the energy already in the battery from vehicle charging. This lets you stay longer on-site but sooner or later (and usually sooner, because you probably started at 65-70% charge), you can no longer keep the tinnies cold.

All told, it is better to have sufficient solar input to be self-sufficient. This needs surprisingly little more capacity if you are setting up to stay at least 5-7 days on site.

The big difference is that the first way has batteries being continually and deeply discharged – and commonly flattened.

The self-sufficient way has batteries remaining close to fully charged. They typically rise beyond 95% during the day, dropping to 80% overnight. Batteries just love this, and return the compliment by living forever. And there's no ongoing concern about the battery running down.

Available energy

This one's easy. The solar industry quantify sunlight in units called 'Peak Sun Hours – commonly abbreviated to PSH, or just 'sun-hours'.

A sun-hour is like a 50-litre drum of sunlight of uniform density: no matter where or when it is gathered, the drum contains the same amount of energy. The same people produce sun-hour maps that use contours to show the average number of sun-hours at different times of the year.

Most sun-hour maps show irradiation in units that need juggling to be meaningful. The sun-hour map in this feature needs only the relevant sun-hour number to be multiplied by the (true) module output. For example, an '80-watt' module (realistically 58 watts) produces 175-350Wh a day in most places one visits from choice.

Cloud cover and smoke

Sun hour maps allow for average cloud cover but there are likely to be exceptional days. It is extremely rare to experience zero solar input. Heavy cloud typically cuts input by 50%. The greatest loss is heavy cloud and rain and also even light smoke from bush fires. Irradiation is commonly diffuse, so light haze may actually increase it, particularly near water or light coloured sand that reflects back to the haze layer.

Module orientation

Over time, optimum input is obtained with the module/s facing into the sun but having the modules flat on a vehicle roof is an acceptable compromise. Except for way down south, there will typically be 15-20% loss and this is readily and cheaply compensated for by adding the equivalent solar module capacity.

What can be powered

Two items are typically responsible for 70% of daily electrical consumption and system cost. These are refrigerators and microwave ovens.

A really efficient 40-70 litre chest-type compressor-driven 12/24V electric fridge uses 250-350Wh/day. A larger (say 110-litre) front-opening fridge of the same type uses 500-600Wh/day (Wh is watt-hours). These are realistically the largest electric fridges that are practicable to

Batteries for Solar Power Systems

Pictured at right is the "Sungel" battery, an Australian designed and manufactured battery specifically intended for remote area power systems, including solar systems. Developed in conjunction with the CSIRO, the battery is claimed to have a 12+ year design life (double the life of other gell cells) and is available in a range of sizes and capacities.

Where most lead-acid cells cash in their chips with deep discharge cycles, the Sungel is claimed to suffer no ill-effects with continual 25% discharging (5000+ cycles) and will still give 2500+ cycles at 50% discharging. Even an 80% discharge regime will still yield 1500+ cycles. The manufacturers, batteryenergy, also have an even higher-rated VRLA gell cell, the energel, with a 20+ year design life.

For more information, visit www.batteryenergy.com.au or call batteryenergy on (02) 9681 3633.

run from solar power (unless you run a solar module franchise on the side).

Better by far are the three-way gas/12V/240VAC units. These run on 12V while driving (when they pull up to 15A). They can be run on 240VAC mains power if and when available, and gas at all other times – NEVER while driving.

Microwave ovens are energy gobblers. Most people assume that because they may say 600-800 watts on their fronts – that's what they draw.

That rating is the heat equivalent of the energy they produce, NOT the electrical energy consumed in doing so. The latter is typically 60% more.

Another 15% is lost in the big inverter needed to drive it (big sine-wave inverters drop off in efficiency at close to full load) . Driven via an inverter, these ovens typically draw 150 plus amps (at 12V).

Ten minutes running a microwave oven equates to the better part of a day's output from a 64-watt module. Apart from the above, you can run most appliances except those whose primary function is to produce or shift heat.

The most efficient lighting is the still developing LED technology, followed by fluorescent (compact globes or tubes) and halogen respectively. Incandescents draw too much to consider (four times that of fluorescent lights).

Sizing the system

When assessing probable daily consumption, add 10% to most things driven via an inverter (15% for microwave ovens) and another 10% to everything to allow for charging/discharging losses.

The total result for all your proposed appliances is typical daily usage. If it varies much from Table 2 go over it again or your system will be bigger and cost more than most.

If you intend only to supplement the battery energy, calculate your proposed battery availability (from probably initial 70% charge to your decision on discharge level). The amount available is typically 30-35% of nominal Amp-hour capacity, ie, 30 amp-hours from a 100Ah battery.

Divide the above by the number of days you want to stay on-site. This gives you the amount available per day. If you stay three days, you have 10Ah available.

From your probable daily usage, corrected for losses, subtract the daily battery energy available. The difference is the amount of you need to produce each day. From actual module output, calculate the number of modules you need.

Calculating self-sufficiency:

Calculate probable daily energy (corrected for losses).

There isn't much of Australia which Collyn Rivers and his wife Maarit haven't crossed. Their WA-made OKA fully solar-equipped 4WD off-roader is seen here crossing a sand dune in the Simpson Desert.

Calculate module capacity needed to provide the above plus 15%-30% (to enable rapid battery recovery following exceptional loads and cloud cover.

Suitable battery capacity should not exceed five times total daily solar input, eg. two 80-watt modules typically operating with five sun-hr/day are likely to produce 116 x 5 = 580Wh/day (or a bit under 50Ah). The optimum battery capacity is therefore 250Ah but since this may weigh 100kg or more, lack of weight-carrying capacity may limit it to less.

A deep-cycle battery used in a properly designed self-sufficient application can be assume to be 90% charged most of the time and the occasional deep-discharge (eg, to 20% remaining capacity) is acceptable. About 70% of nominal capacity is thus available for use and a 350Ah battery bank will be fine.

Sun-hour assumptions

Plotted sun-hour data is surprisingly accurate but knowing this is of no help unless you know where you are likely to be, and when.

As a general guide, solar self-sufficiency is practicable from 2 sun-hours/day if you use a gas/electric fridge; from 3 sun-hours/day if you have an efficient 40-70 litre chest type fridge, and 4 sun-hours/day for a door-opening electric fridge (but this will still need a lot of modules).

If you go for an electric-only fridge, it's advisable to have back-up generator – preferably a DC unit producing up to 15V for quick battery charging. Most combination 240V AC/12V DC generators cannot produce anything like 15V and therefore will never fully charge a battery.

If you design the system assuming four or more sun-hours/day, it's advisable to allow for adding further solar capacity in the future, ie, by installing adequate cable and solar regulator capacity.

The Golden Rule

Never have more battery capacity than you can speedily re-charge. If you need to economise, cut back on battery storage not solar modules. If you cannot generate it, you cannot store it anyway. **SC**

Much of the information for this article comes from Collyn Rivers' recent book, "***Solar That Really Works – Caravan Edition***". It goes into the subject in significantly more detail.

The book is available at $37 including postage and packing, direct from the publisher, Caravan & Motorhome Books, PO Box 3634, Broome, WA 6725. Phone 08 9192 5961
Website: www.caravanandmotorhomebooks.com

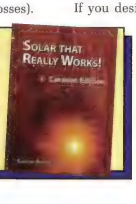

BENCHMARK

JULY 2003

1968 35 2003 YEARS

Universal Charger Kit

Fast charges NiCad, NiMH, LiION, SLA and Lead-Acid batteries. Features short circuit battery protection, time-out protection, and fuse protection, as well as multi-LED charge indicators.

K 3217

$119 SAVE $30

ESR and Low OHM Meter Kit

A smart circuit which is capable of measuring an aspect of electricity capacitor performance (known as the Equivalent Series Resistance), which normally is very difficult to check with similar models in its class. Also great for measuring very low values of resistance. Complete with all components, hardware, PCB, case and pre-punched silk screened front panel.

K 7204

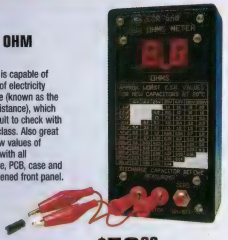

$79.96

GREAT deals! GREAT kits!

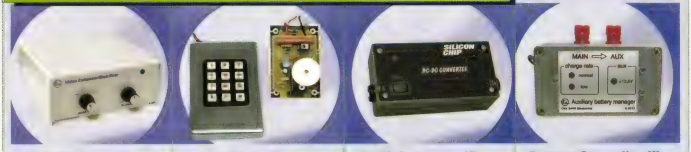

Video Enhancer Kit

Improves image quality from poor quality videotapes and reduces image degradation when making copies. Includes circuitry which offers more stable viewing of video signals by stripping out "piggyback" information. Supplied with all specified components, PCB, plastic instrument case and pre-punched and screened front panel.

K 5417

$59.84 SAVE $20

Keypad Alarm Kit

Can be used as a stand-alone alarm system for your home, commercial premises or car and also for keypad door entry. Can also be incorporated into a larger main alarm system. Supplied with PCB and all necessary components.

K 4305

$49.87

DC-DC Converter Kit

This versatile circuit lets you run your laptop in your car, charge SLA batteries (6.5Ah or bigger) or run 24V equipment from a 12V battery. Maximum current is 2A depending on voltage.

K 3234

$39.94 SAVE $10

Battery Controller Kit

This dual battery manager controls when and how the 'auxiliary' battery is connected to the car's electrical system. The kit is supplied with all components, hardware, PCB, diecast box and front-panel label.

K 3212

$39.92 SAVE $10

Theremin Kit

Theremin is the forerunner to modern synthesised music. You can create eerie science fiction movie sounds or make melodious music simply by hand movements. Kit is supplied with high quality case, all necessary components, and detailed instructions.

K 3015

$39.89 SAVE $10

100W Amp Module Kit

This amplifier module produces low distortion and features in-built protection. It has an output power of 50W into 8 ohms and 70W into 4 ohms. Supplied with components, PCB, fuses and transistor mounting bracket.

K 3431

$39.87 SAVE $10

Vader Voice Kit

Here's one for Dr Who and Star Wars fans! Disguise your voice as either Darth Vader or a Dalek. Comes with all components, PCB, hardware, case, speakers and front-panel label.

K 3511

$25.92 SAVE $10

WE WON'T BE BEATEN! We'll match any competitor's advertised price!

Where do you go for the hottest kits?

1968 35 2003 YEARS

Benchtop Power Supply Kit

Features a variable output of 2.5 to 18 volts, a switchable current limiting (30mA and 1.2 amps), selectable voltage and current metering and an output load switch. Includes components, hardware, PCB, panel meter, case and front panel.

K 3202

$78.87 SAVE $20

FM Transmitter Kit

A mini FM stereo transmitter that is easy to build. Crystal-locked to the selected frequency so there is no drift. No messy tuning coils to wind and adjust. Supplied with all necessary components.

K 5009

$49.84 SAVE $10

Mighty Midget Amp Kit

This compact audio amplifier module can deliver up to 70W into a 4 ohm load when powered from a 12V car battery. Supplied with PCB and all necessary components.

K 5401

$34.88 SAVE $5

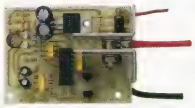

Speed Control Kit

Provides high current speed control for 12 and 24 volt DC systems. Ideal for controlling 12V DC motors in cars (eg. fuel injection, water/air intercoolers, headlight dimming, etc.). Supplied with components and PCB.

Case optional *(H 2853)*

K 3072

$26.87

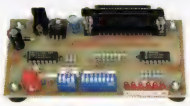

Kit Printer Port Tester

A simple hardware simulator that allows you to manipulate the port's data and control lines, monitor the status lines and send the printer or other equipment a strobe pulse. Ideal for trouble-shooting. Supplied with PCB and all necessary components.

K 3609

$16.87

Mini Drill Control Kit

Designed to control 12V DC mini drill motors or lights with currents up to 1 amp. Performs a pulse width modulation technique to send bursts of current to the motor. Supplied with components, PCB and heat sink for the switching transistor.

Case optional *(H 2853)*

K 3070

$16.69

Battery Charger Regulator Kit

Turns a 'bare bones' 12 volt automotive battery charger into a fully regulated charger. Designed to adapt an Arlec 4 charger or similar unit. Supplied with components, PCB and heat sink bracket

Case optional (use charger case)

K 3127

$18.79 SAVE $10

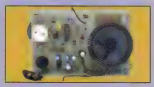

FM Radio Receiver Kit

Great "hands on" way to learn about Radio Frequency (RF) circuits and Audio Frequency (AF) amplifiers. 9V battery power source required. Supplied with components, PCB and speaker.

Case optional *(use H-2852)*

K 5014

$14.94

LED Torch Kit

Features high brightness with cool white light, low battery drain and a torch bulb that never needs replacement. Supplied with all components, white LED, PCB and mini torch.

K 3018

$12.94 SAVE $5

DICK SMITH ELECTRONICS

VISIT OUR WEBSITE on www.dse.com.au – over 10,000 products updated daily.

Where do you go for test equipment.....

100Mhz Universal CRO Probe

Universal probe with wandering earth lead and insulated shroud. Complete with a handy pouch.

Working Voltage: 600V AC p-p (x10).
Input capacitance: 150pF(x1), 18pF(x10).
Input resistance: 9M Ohm (x10).
Bandwidth: 100MHz.

Q 1249

$29.98 LOW PRICE

60MHz Universal CRO Probe

Universal probe with wandering earth lead and insulated shroud. Complete with a handy pouch.

Working voltage: 600V AC p-p (x10).
Input capacitance: 170pF(x1), 27pF(x10).
Input resistance: 9M Ohm (x10).
Bandwidth: 60MHz.

Q 1247

$24.98 LOW PRICE

Self-Retracting Coiled Meter Lead Set

Saves the hassle of leads cluttering up the workbench. These coiled leads spring back into shape after they've been extended. Red and black with banana plugs.

Q 1918

$7.60 SAVE $6

Meter Test Leads with Right Angle Banana Plugs

Fitted with 90 degree banana plugs and standard probes these test leads are suitable for most analogue multimeters and a large range of other test equipment.

Q 1913

$4.98 SAVE $5

20MHz Dual Trace Basic CRO

This affordable CRO suits a wide range of applications. Features dual trace, dual trigger CRO with fully adjustable sweep time (20 steps) and sensitivity, selectable trigger modes, AC, TV-H and TV-V trigger coupling, plus more!. Complete with two CRO probes.

Q 1802

$498 LOW PRICE

Bench Style Function Generator

The FG-30 is a multi-purpose, highly reliable and low-cost 3MHz sweep function generator. While being easy to use, it also provides many convenient features, which make it an ideal instrument for electronics, education, production, and research and development laboratories. Features include 6 output waveforms, a pulse generator and a sweep generator.

Q 1826

$199 SAVE $100

Lab Power Supply 0-30V 2.5 Amp with Digital Display

Laboratory grade linear power supply with 0-30V adjustable output and an adjustable continuos current from 0A to 2.5A at all selectable output voltages. Features separate voltage and current metering, overload protection and high/low current front panel terminals.

Q 1770

$148 SAVE $51

DSE Digital Sound Level Meter

Measure noise levels in factories, schools and offices. Provides digital read-out and bargraph display. Measures levels from 40dB to 130dB SPL with auto or manual ranging.

Q 1362

$98 SAVE $50

22 Range Digital Multimeter with True RMS

Features a 3200 count LCD, analogue bargraph, data hold and safety input warning buzzer. Covers ranges of AC/DC volts, AC/DC current and resistance. Also tests diodes.

Q 1455

$60 SAVE $60

DSE Digital Callipers

These budget priced callipers feature a 4 digit LCD, internal and external measuring jaw, depth measuring blade, metric/imperial conversion and zero setting.

Measurement Range: 0-150mm, 0-6".

Q 1381

$39.94 LOW PRICE

HUGE RANGE OF STOCK! Lowest prices guaranteed.

.....and really great savings?

1968 35 2003 YEARS

BRYMEN Deluxe Multimeter

A high quality meter, designed with safety in mind. Splash proof against dust and moisture and features a fast 4,000 count digital display and is capable of a dual display mode. Other features include an analogue bargraph on the LCD screen allowing easy viewing of changing measured parameters and various relative modes. Ranges include AC/DC volts, AC/DC amps, resistance, conductance, frequency and capacitance. Also tests diodes.

Q 1565

CLEARANCE! While stocks last **$128.93** SAVE $120

Digital Light Meter

Measures up to 50,000 lux over 3 ranges. Features auto-zero function, low battery indicator and carry case. Requires a 9 volt battery for up to 200 hours of continuous use.

Q 1400

CLEARANCE! While stocks last **$67.93** SAVE $60

DSE LAN Cable Tester

An easy-to-use cable tester that can verify cable continuity, short circuits and incorrect wiring of Cat 5 and coaxial LAN cables. Comes complete with a RJ45 to RJ45 connector lead, RJ45 to BNC socket connector lead, RJ45-BNC plug connector lead and a BNC to BNC adaptor, in a protective carry case.

Q 1501

CLEARANCE! While stocks last **$66.63** SAVE $30

12 Range Analogue Multimeter

Diode fuse protected and features safety recessed test lead connections. Ranges include AC/DC volts, DC current and resistance. Also tests 1.5V, 9V batteries.

Q 1006

CLEARANCE! While stocks last **$19.93** SAVE $10

DSE 3.5 Digit LED Panel Meter

With 200mV full-scale range, automatic zeroing, super-bright red LED display, true differential input and reference, 1MOhm impedance, 2.5-second conversion rate, user selectable decimal point, and many other features.

Q 2230

CLEARANCE! While stocks last **$14.93** SAVE $13

Battery Tester with Carry Case

Save money with this easy-to-use 15-range battery tester. It tests most battery sizes, includes a button cell test compartment, hard carry case and test leads. *Q 1001*

CLEARANCE! While stocks last **$9.93**

Multi-Purpose Battery Tester

A combination battery, fuse, bulb and continuity tester. Tests AAA, AA, C, D, 9V and button batteries. Indicates the condition of fuses and bulbs. Beeper sounds if resistance is less than 20kOhm in continuity test mode.

Q 1009

CLEARANCE! While stocks last **$9.93**

DSE Voltage Divider Board

Use this voltage divider board to extend the voltage range of the *(Q 2230)* Digital LED Panel Meter.

Q 2231

CLEARANCE! While stocks last **$4.93**

On sale from 28/06/03

**Limited stock All stocks marked clearance, limited or with an '*' may not be available in all stores or via Direct Sales. Rainchecks do not apply. Offers expire 25.07.2003.*

DIRECT SALES DIVISION

PHONE: 1300 366 644(Local call charge).

FAX: (02) 9642 9155.

MAIL: DICK SMITH ELECTRONICS Direct Sales Reply Paid 500, PO Box 500, Regents Park DC NSW 2143(No stamp required).

DICK SMITH ELECTRONICS

65930

email: directsales@dse.com.au

MAJOR CREDIT CARDS ACCEPTED.

Over 200 outlets throughout Australia and New Zealand

VISIT OUR WEBSITE on www.dse.com.au – over 10,000 products updated daily.

Smart card reader & programmer

This unit allows you to program both the microcontroller and EEPROM in the popular "Gold" wafer smart cards. It hooks up to the serial port of your PC and can be operated as a free-standing unit or installed in a PC drive bay.

BACK IN THE January 2003 issue of SILICON CHIP, we described a basic smart card reader and programmer that is capable of accessing the EEPROM (data) memory component of Gold wafer cards over a Phoenix-type interface.

This type of programmer is all that's needed for cards that contain pre-programmed PICs. For blank cards, however, it's only half of the solution. Read on to find out why.

Smart card smarts

Smart cards come in dozens of different configurations, with different microcontrollers, memory sizes and even contact positions. However, the cards that we're interested in conform to a recognised set of ISO standards, described in ISO-7816 and entitled "Identification Cards – Integrated Circuit Cards with Contacts".

Parts 1-3 of this document define things like physical dimensions, contact size and position, and interface AC & DC characteristics. They also describe the protocol used to exchange information across the card interface.

Gold wafer cards

Due to their lower cost and available software support, this project targets the "Gold" wafer smart card variety. The Gold card incorporates just two ICs: a PIC16F84(A) and a 24(L)C16 EEPROM.

Reproduced from the January 2003 article, Fig.1 depicts the internal in-

terconnections. As you can see, the EEPROM is not wired to the interface contacts but is controlled exclusively by the PIC.

In a real application, the PIC is programmed with a card operating system. The function of this operating system depends entirely on the card's application but at least one of its tasks is to provide access to EEPROM data via the interface.

With this arrangement, the requirements for EEPROM access are quite straightforward. They entail a relatively simple hardware interface to the card and some software that can speak the ISO protocol. This was the basis of the first reader/programmer design.

Blank cards

But what happens if the PIC's program (Flash) memory is blank? With no card operating system, how do we access the EEPROM? The answer is, of course, that it can't be done with this type of card (or with the original reader/programmer design).

So how *is* the PIC programmed? Well, the connections between the PIC and the card contacts have been designed for dual purposes. As well as supporting "normal" operation, they also allow the PIC to be programmed in-circuit.

Unlike the previous design, then, this new design includes the ability to program the PIC on a blank card. Of course, you can also erase and reprogram the PIC on a used card too, if so desired.

PC connection

Initially, Gold cards and their predecessors were designed for use in set-top boxes and the like. However, it wasn't long before someone interfaced one to a PC serial port and wrote some software to access the internals. This is probably the origin of the so-called "Phoenix" interface.

With a tiny change to the Phoenix interface, it becomes a "Smartmouse" interface, another popular "standard" among the card community. Our new design is compatible with both of these interfaces.

How it works

As outlined earlier, the cards that we wish to read and write contain two separate ICs: a PIC microcontroller and an EEPROM. To access the EEPROM, a Smartmouse or Phoenix-type interface is required. On the other hand, to read or program the PIC's internal memories, a PIC programming interface is required.

Our design solves this conundrum by providing both types of interfaces. A 4-pole 2-position pushbutton switch (S1) is used to select between the two interfaces, or "modes".

Fig.2 shows the circuit details for the Smart Card Reader/Programmer. This shows S1 set to the Smartmouse/Phoenix ("normal") position so we'll look at the circuit operation in this mode first.

Smartmouse/Phoenix mode

In this mode, the interface consists of four signal lines: I/O (Input/Output), CLK (Clock), RST (Reset) and Card Detect.

All information exchange between the card and the outside world occurs in half-duplex serial format on the I/O interface line. To help with the explanation, we'll refer to this information as "data". However, actual information exchange may consist of commands (to the card), status (from the card) and EEPROM memory data (to and from the card).

Data from the PC to the smart card is transmitted on the serial port TXD line. It arrives on CON4 (pin 3) and is converted to digital logic levels by the 15kΩ & 100kΩ resistors and clamp diodes D4 & D5. IC2f buffers and inverts the data and it is then applied to the smart card I/O (C7) line via a 4.7kΩ isolation resistor and S1d.

Tracing the I/O line back from the smart card socket, it connects to pin 11 of IC1 via a 470Ω resistor. This path carries data from the smart card back to the PC. It is transmitted on the serial port RXD line (CON4, pin 2) after conversion to voltage

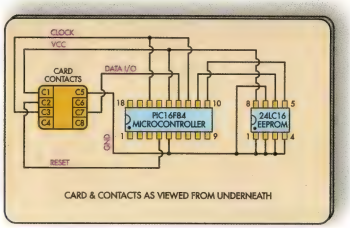

Fig.1: this diagram shows the internals of a Gold wafer card. If you want to know more about the PIC16F84A and 24LC16 chips, detailed data sheets can be downloaded from www.microchip.com

We fitted our prototype to a standard 3.5-inch to 5.25-inch drive mounting kit which was then slotted into a spare drive bay.

Parts List

1 PC board, code 07107031, 141mm x 101mm
1 ICA-700 smart card socket (landing contact style) (CON1)
1 9-way 90° PC-mount female 'D' connector (CON4)
1 4PDT PC-mount slide switch with green LED indicator (S1 & LED3)
2 M205 fuse clips
1 M205 500mA quick blow fuse
2 3-way 2.54mm SIL header strips
2 jumper shunts
1 9-way RS232 cable (D9 male to D9 female, see text)
240mm (approx.) length of 0.71mm tinned copper wire

Semiconductors
1 MAX232 RS232 receiver/driver IC (IC1)
2 74HC04 hex inverters (IC2, IC3)
1 2N3906 PNP transistor (Q1)
1 2N3904 NPN transistor (Q2)
1 78L05 +5V regulator (REG1)
1 1N4004 diode (D1)
4 1N4148 diodes (D2-D5)
1 13V 1W zener diode (ZD1)
1 3.579545MHz crystal (X1)
1 6MHz crystal (X2)
1 3mm red LED (LED1)
1 3mm yellow LED (LED2)

Capacitors
1 100µF 25V PC electrolytic
2 10µF 16V PC electrolytic
7 1µF 50V monolithic ceramic
1 220nF (0.22µF) 50V monolithic ceramic
1 100nF (0.1µF) 50V monolithic ceramic
2 22pF 50V ceramic disc

Resistors (0.25W, 1%)

1 1MΩ	3 4.7kΩ
1 100kΩ	2 1.5kΩ
3 47kΩ	3 1kΩ
1 15kΩ	6 470Ω
1 10kΩ	1 47Ω

Additional parts for free-standing version
1 2.5mm PC-mount DC socket (CON2)
9V DC 150mA (min.) plugpack
4 small stick-on rubber feet

Additional parts for PC drive bay-mounted version
1 90° PC-mount disk drive power connector (CON3)
1 3.5-inch to 5.25-inch disk drive mounting adapter & screws (Jaycar XC-4630)
3 M3 x 10mm cheese head screws
3 M3 nuts
6 M3 flat washers

Where to buy a kit

The design copyright for this project is owned by Jaycar Electronics and complete kits of the freestanding version will be available from Jaycar by the time this article appears in print (kit includes the PC board plus all on-board components). Note: the Jaycar kit will be supplied with standard IC sockets instead of machined IC sockets, as used on the prototype.

levels by IC1, a MAX232 receiver/driver IC.

Before communication can be established with a card, it must first be initialised to a known state. This is accomplished with the Reset signal, which is controlled by the serial port RTS line (CON4, pin 7). Again, IC1 converts this to a logic-compatible (0-5V) level, after which it is applied to the RST (C2) line of the card via switch S1b.

With jumper JP1 positioned as shown, the RST signal polarity is compatible with the Phoenix-type interface. However, by moving the jumper to position 2-3, the RST signal is inverted by IC3b and the interface becomes Smartmouse compatible.

If you've worked with PICs before, you'll know that apart from power (Vcc) and ground (GND), they also require a clock source to function. This is supplied on the CLK (C3) interface line and is generated by a conventional Pierce oscillator formed by IC2e, a crystal and a few passive components.

To ensure compatibility with a wide range of cards and software, the oscillator frequency can be set to either 3.5795MHz (crystal X1) or 6MHz (crystal X2), depending on the position of JP2. IC2d buffers the oscillator output and series termination is provided with a 47Ω resistor.

Card detection

When a card is inserted, it makes physical contact with a switch at the rear of the socket. One side of the switch is connected to ground, while the other is pulled up to +5V with a 10kΩ resistor. When the contacts close, signalling a fully inserted card, a connection to ground is made through the switch, pulling pin 10 of IC1 low.

After conversion to RS232 levels by IC1, the Card Detect signal appears on serial port lines CD and CTS. Both lines are driven in order to be compatible with various card applications.

Well, that's all there is to the Phoenix/Smartmouse interface. It's very similar to the circuitry used in the reader/programmer described last January. Now let's look at the PIC programming interface, selected when S1 is in the alternative position.

PIC programming mode

Although this mode utilises the same physical connections to the card as those described above, the electrical characteristics of the signals, as well as their connections to the PC serial port, are quite different.

With S1 in the alternative (right-hand) position, the board is transformed into a Ludipipo/JDM-compatible PIC programmer. Compatibility with these types of programmers enables us to take advantage of the many free PIC programming software packages available on the Internet.

In this mode, only three signals are required: DATA, CLK and MCLR/VPP.

As before, data is exchanged over a single interface line, now named "DATA". However, in this mode, transmission from the PC occurs on the serial port DTR line (CON4, pin 4). The incoming data is first converted to logic levels by IC1 and then inverted by IC3e. A 4.7kΩ resistor provides the necessary isolation before the signal is piped into the card via S1d on the DATA (C7) line.

Conversely, outgoing data is first inverted by IC3c and is fed via S1c and a 470Ω resistor to IC1 for level conversion and transmission on the CTS serial line.

When in programming mode, PIC micros do not require a conventional clock (oscillator) source. Instead, a signal timed specifically for the pro-

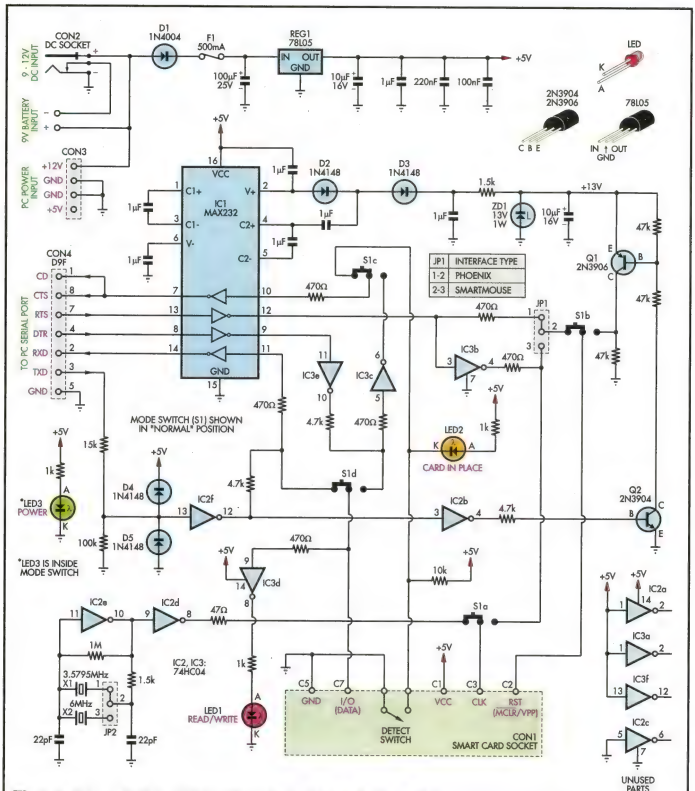

Fig.2: the complete circuit diagram of the Smart Card Reader/Programmer. Slide switch (S1) is central to its operation, routing signals between the PC's serial port and the card interface according to the selected mode.

gramming sequence must be provided on the RB6 pin. Just to confuse matters, this signal is still referred to as "CLOCK".

The CLOCK signal originates from the serial port RTS line. Once again, IC1 does the level conversion after which the signal is inverted by IC3b and fed to the card via S1a.

Vpp generation

Many early PIC micros, including

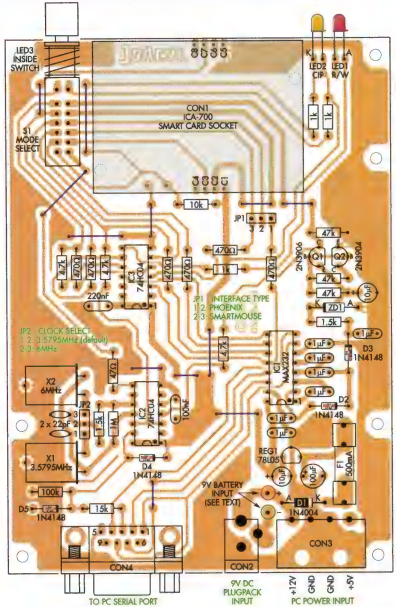

Fig.2: refer to this full-size overlay diagram when assembling the board. Be careful not to install any of the diodes, electrolytic capacitors or ICs in reverse. They must be oriented exactly as shown here.

Table 2: Capacitor Codes

Value	µF Code	EIA Code	IEC Code
220nF	0.22µF	220n	224
100nF	0.1µF	100n	104
22pF	22pF	22p	22

the PIC16F84(A), must be supplied with a high voltage (12.5V - 13.5V) during programming of the internal Flash and EEPROM memories. Our design uses a unique method of generating this programming voltage (VPP).

The voltage boosting circuitry is based around IC1, a MAX232 RS232 line driver and receiver IC. Of interest is the method that this chip uses to generate the ±10V needed for the RS232 interface.

Basically, internal switches combined with four external 1µF capacitors form two charge-pump voltage circuits, one doubling the supply (VCC) voltage to +10V (nominal) and the other inverting the result to obtain -10V.

By adding diodes D2 & D3 and a 1µF capacitor to pin 4, we've extended the capability of the chip to create a voltage quadrupling circuit.

With the losses across the diodes, as well as the loading imposed by the RS232 drivers and the VPP regulation circuitry, the result at the cathode of D3 is less than four times the VCC supply (around 15.6V). However, this is more than adequate for our purpose.

Zener diode ZD1 and its 1.5kΩ series resistor form a shunt regulator, ensuring a reliable 13V VPP supply. We've biased the zener with as little current as possible to minimise load-

Table 1: Resistor Colour Codes

❑	No.	Value	4-Band Code (1%)	5-Band Code (1%)
❑	1	1MΩ	brown black green brown	brown black black yellow brown
❑	1	100kΩ	brown black yellow brown	brown black black orange brown
❑	3	47kΩ	yellow violet orange brown	yellow violet black red brown
❑	1	15kΩ	brown green orange brown	brown green black red brown
❑	1	10kΩ	brown black orange brown	brown black black red brown
❑	3	4.7kΩ	yellow violet red brown	yellow violet black brown brown
❑	2	1.5kΩ	brown green red brown	brown green black brown brown
❑	3	1kΩ	brown black red brown	brown black black brown brown
❑	6	470Ω	yellow violet brown brown	yellow violet black black brown
❑	1	47Ω	yellow violet black brown	yellow violet black gold brown

ing on the MAX232. If the add-on circuitry were to draw more than a few mA, it would load down the converter circuitry, lowering the RS232 voltage levels below the specified minimums.

During PIC programming and verification, the 13V (nominal) VPP voltage is switched through to the MCLR/VPP (C2) line of the card socket with the aid of transistors Q1 & Q2 and their associated bias resistors.

The VPP enable signal originates from the serial port TXD line. It is first converted to logic (0-5V) levels by the 15kΩ & 100kΩ resistors and clamp diodes D4 & D5. Next, it is inverted by IC2f and inverted again by IC2b before driving the base of switching transistor Q2.

When Q2 switches on, it pulls Q1's base towards ground, turning it on and thus switching VPP through to the card socket (via S1b). A 47kΩ resistor from MCLR/VPP to ground ensures that the PIC is held in the reset state when the VPP supply is switched off.

Note that the (newer) PIC16F87X and PIC16F62X series micros used in the Silver and Emerald cards do not require high voltage for programming. However, Microchip has retained support for this programming method to ensure backward compatibility. Therefore, this project should be able to successfully program the PICs in all of these cards, given the appropriate software.

Read/Write LED

LED1 indicates activity on the I/O signal line. Due to the inversion of data between Normal and PIC Programming modes, this LED will either pulse dimly or appear to be mostly on, with a perceptible flicker during data exchange.

Power supply

When used as a free-standing unit, a 2.5mm DC socket (CON2) accepts power in the 9-12V DC range. This is suitable for connection to a low-cost, 9V DC unregulated plugpack (positive to centre pin).

For use with a laptop PC, the unit can also be powered from a 9V battery. The PC board will accept a pair of 1mm pins for connection to the battery leads (see Fig.3). Note that you'll need to fit an in-line switch, as the current drain is quite high (about 35mA with the card inserted) and this would quickly exhaust a PP3 battery.

The Smart Card Reader/Programmer board connects to a spare serial port on your PC via a standard RS232 cable (D9 male to D9 female). Note that this prototype includes both power sockets (only one normally required).

When installed in a PC drive bay, 12V DC is sourced from the PC power supply via CON3, which is a disk drive power socket.

Regardless of the power source, diode D1 provides reverse polarity protection. A 500mA series fuse is included for safety reasons and will open only in the case of serious failure.

Following the fuse, a 100µF capacitor smooths the input before it is applied to a conventional 3-terminal regulator (REG1). All circuit elements are powered from the regulator's +5V output. In addition, the regulator's built current limiting feature, which comes into play at about 140mA, protects the board if a faulty smart card is inserted.

Construction

All components mount on a single PC board, measuring 141mm x 101mm and coded 07107031. Referring to the overlay diagram in Fig.3, begin by installing all 12 wire links using 0.7mm tinned copper wire or similar.

Follow up with all the low-profile components. Resistors first, then diodes (D1-D5, ZD1), transistors (Q1, Q2), regulator (REG1) and capacitors. Note that the diodes must be installed

Silicon Chip Binders

These binders will protect your copies of SILICON CHIP. They feature heavy-board covers & are made from a distinctive 2-tone green vinyl. They hold up to 12 issues & will look great on your bookshelf.

★ 80mm internal width

★ SILICON CHIP logo printed in gold-coloured lettering on spine & cover

★ Buy five and get them postage free!

Price: $A12.95 plus $A5.50 p&p. Available only in Australia.

Silicon Chip Publications
PO Box 139
Collaroy Beach 2097

Or fax (02) 9979 6503; or ring (02) 9979 5644 & quote your credit card number.

Use this handy form

Enclosed is my cheque/money order for

$_____ or please debit my

☐ Bankcard ☐ Visa ☐ Mastercard

Card No:

_____

Card Expiry Date ____/____

Signature _____

Name _____

Address _____

_____ P/code_____

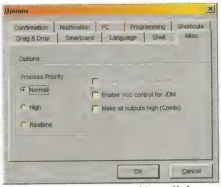

Fig.4: to enable the serial/parallel port driver, check the "Enable NT/2000/XP Driver" box (see text). Note that this option is disabled on Windows 9x/Me, as the driver is not needed for these versions of Windows.

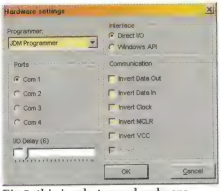

Fig.5: this is what your hardware settings should look like. You may need to increase the I/O Delay slider by a few points if you get the occasional verify error but start off with the default value of (6).

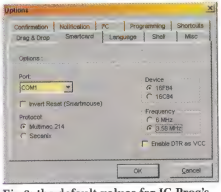

Fig.6: the default values for IC-Prog's smart card settings. Not all cards support the 6MHz clock rate, so select the "3.58MHz" setting for maximum reliability. Jumper JP2 on the PC board should be set to agree with the frequency selected here.

with the cathode (banded) ends oriented as shown.

Orientation of the 10µF and 100µF electrolytic capacitors is important too. Their positive sides must be aligned

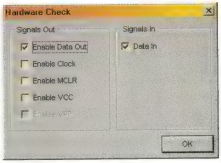

Fig.7: if you can't get PIC programming mode to work, IC-Prog's "Hardware Check" feature might help. Clicking in these boxes toggles the indicated signal lines, providing a very useful fault-finding aid.

Fig.8: make sure that there is a tick against the "Smartcard (Phoenix)" option on the *Settings* menu.

as indicated by the "+" symbol on the overlay.

The two crystals (X1, X2) can go in next. They mount in a horizontal fashion, so bend the leads at 90° (about 2mm from the body) before installation. After installation, connect the crystal cans to ground by soldering a short length of tinned copper wire to the top of each can and to the pad directly underneath (see photos).

Fit the connectors (CON1-CON4), the two 3-way jumper headers (JP1 & JP2) and mode switch (S1) next. Take care to ensure that these components are seated all the way down on the PC board surface before soldering them.

Note that it is not necessary to install both CON2 and CON3. If you'll be mounting the finished project in a PC, install CON3. If you'll be using it stand-alone, install CON2 instead.

Install the two fuse clips next. Note that the small retaining lug on each clip must be positioned to the outer (fuse end) side, otherwise fuse installation will be impossible.

The three ICs (IC1-IC3) and the two LEDs (LED1 & LED2) should be installed last of all. The orientation of these devices is very important. Align the "notched" end of the ICs (the pin 1 end) as shown in Fig.3.

If you're building a freestanding unit, you can also install the LEDs now. The flat (cathode) sides should

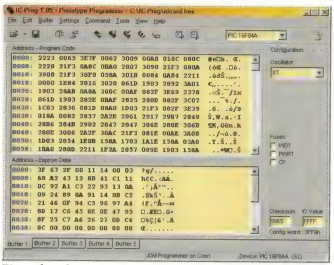

Fig.9: this shot was taken just before we hit the "Write All" button. We've selected the correct type of PIC, loaded the .HEX file and double-checked the configuration bits. Note that if the CP (code protect) bit is enabled, it will be impossible to read or verify the PIC after programming.

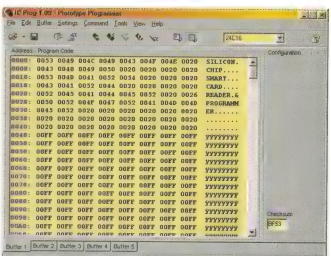

Fig.10: once the PIC has been successfully programmed, select the 24C16 device from the drop-down menu. The card's EEPROM should then be fully accessible.

Fig.11: this message will appear if IC-Prog can't talk to the PIC. Assuming that the PIC has been successfully programmed (with the correct loader), it probably means that you haven't switched modes. It might also mean that the crystal oscillator either isn't oscillating or is set to 6MHz when it should be 3.58MHz. Also, make sure that the positions of JP1 and JP2 match the complementary settings on the "Smartcard" tab.

face the smart card socket. If you intend fitting the board in a PC or other enclosure, you'll probably want to leave the LEDs out until you've prepared the front panel and can gauge the required lead length.

Testing

It's a good idea to apply power and perform a few quick checks before inserting a smart card, so let's do that next.

Plug in your chosen power source and switch on. No smoke? Good! Set your multimeter to read volts and measure between pins 7 & 14 of both IC2 and IC3. Your meter should read about 5.0V in both cases.

For the remaining tests, connect the negative probe of your meter to any handy ground point (say, the anode of D5 or one of the crystal cases). Now measure pin 2 of IC1 with the positive probe. The reading should be about 8.7V or more. Now move to pin 6 of IC1 - expect at least -7.8V here.

Next, measure the cathode (banded) end of D3. If all is well, there should be 15.6V or more at this point. Finally, measure at the cathode of ZD1. Assuming that the shunt regulator is doing its job, the VPP voltage will be pretty close to 13.0V.

Housing

For a freestanding unit, all you need do is fit four small self-adhesive rubber feet to the underside of the board.

Alternatively, the board can be installed in a spare drive bay in your PC. The preferred method is to first mount the board in a 3.5-inch to 5.25-inch plastic disk drive adapter and then fit this into a spare 5.25-inch drive bay, as shown in the photos.

If your power supply lacks a spare drive power connector, you can purchase a "Y" cable splitter from most computer outlets (eg. Jaycar Cat. PL-0750).

The serial port cable can be routed out through any convenient exit point at the rear of the case for connection to a free serial port.

We cut down an old 5.25-inch drive blanking plate to fill the hole in the front of the adapter. To save time and effort, you could also use a piece of much thinner plastic or even cardboard for the job. You can photocopy the front panel label in Fig.12 and use it as a template for the hole and slot positions.

Installing the software

Being compatible with several popular serial port-connected programmers, your new board will work with much of the freely available card software on the Internet. We've selected "IC-Prog" for our demo, primarily because it runs on all recent versions of Windows (Win9x/Me and Windows NT/2000/XP) and also because it can program both the PIC and EEPROM in Gold cards.

You can obtain the latest version of IC-Prog from **www.ic-prog.com**. In all, you'll need to download three files: the application (icprog105a.zip), the driver for Windows NT/2000/XP (icprog_driver.zip) and the help file (icprog.chm). Note that the filenames will change over time as IC-Prog is improved and updated.

Unlike most Windows applications, IC-Prog is not self-installing, so you'll need to manually create a folder to contain the files. We named ours "C:\IC-Prog". It's then just a matter of unzipping the first two files into the new directory, and creating a shortcut on your desktop (or Start menu) to "icprog.exe". The help file (icprog.chm) should also be saved in this new folder.

Installing the port driver

For Windows NT/2000/XP users, the serial/parallel port driver should be installed as the next step.

Launch IC-Prog (ignore any error messages) and from the main menu select *Settings -> Options*. Click on

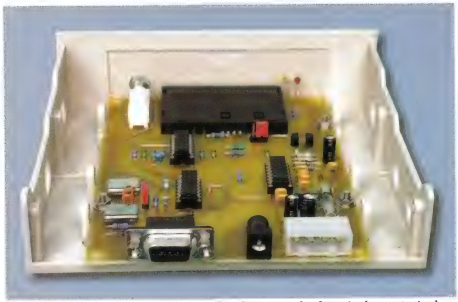

This view shows how the PC board is fitted to a standard 3.5-inch to 5.25-inch drive mounting kit. We cut down an old 5.25-inch drive blanking plate to fill the hole in the front of the adapter.

the *Misc* tab and from the list of displayed options, click on the "Enable NT/2000/XP Driver" check box (do not change any other settings on this tab!). Follow the prompts to restart your machine so that the driver can be installed and started.

Note: if the port driver is not properly installed, you will get a "Privileged Instruction" error whenever IC-Prog attempts to access the serial port.

Before use, IC-Prog must be set up to suit the programming hardware. Let's do that next.

Setting up IC-Prog

From the main menu, select *Settings -> Hardware* to bring up the "Hardware Settings" dialog (see Fig.5). Choose "JDM Programmer" as the programmer type and "Direct I/O" as the interface method. You should also select the COM port that you'll be using with the programmer. No other settings in this dialog should be changed (do not check any of the "invert signal" options!) at this stage.

Next, select *Settings -> Options* and click on the *Smartcard* tab. From the drop-down list, select the appropriate COM port. If your card is set for Smartmouse compatibility (JP1 pins 2-3 shorted), you should select the "Invert Reset" option. From the remaining settings, choose "Multimac 2.14", "16F84" and "3.58MHz". Now click on the OK button to save the settings and close the dialog.

Finally, select *Settings -> Smartcard (Phoenix)*. A tick should now appear against this option in the Settings menu, indicating that smart card programming mode is enabled (see Fig.8).

Programming the PIC

If you're an old hand at card programming, then you'll probably have all the necessary files ready to go. In this case, IC-Prog includes a "Card Wizard" feature to enable you to program your card in short order. However, much more flexibility is afforded if we bypass the Wizard and perform each task individually.

For blank cards, the first task is to program an operating system (OS) into the PIC micro. This operating system will then enable us to access the on-card EEPROM. This is often referred to as "through-PIC programming".

The operating system can be any generic one that provides full EEPROM access over a Phoenix/Smartmouse-type interface. Various versions are freely available on the Internet and are often called "loaders", after the fact that they're sole purpose is to "load" the EEPROM.

Not all loaders are created equal. Look for one in Intel HEX file format (.hex or .h8) that is Multimac 2.14 (or later) compatible and targeted for the 16F84. We downloaded our card OS from **www.maxking.com/ZIPS/rb7hex.zip**

To program the loader into the PIC, select the appropriate PIC device from the drop-down list on the main menu. For Gold cards, choose the PIC16F84A. Next, select *File -> Open File* and navigate to wherever you unzipped the loader. Double-click on the file to open it, and the contents will appear in the main IC-Prog window.

Before you "torch" your card, double-check that the micro configuration bits (displayed on the right side of the main window) are set correctly. The oscillator type should always be set to "XT" for smart cards. For the 16F84(A), the WDT & PWRT bits should be disabled (not checked) unless the loader documentation indicates otherwise. It's also unlikely that you'll want the CP (Code Protect) bit enabled.

Make sure that the programmer is in PIC programming mode (switch out) and that the power is on. Now insert a blank card (contacts facing down and towards the slot) into the programmer. You should feel it slip all the way home with a slight click and the "Card In Place" LED should light. OK – hold

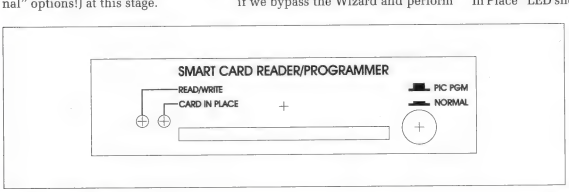

Fig.12: photocopy this diagram and use it as a drilling & cutting template for the drive bay blanking plate.

your breath and click on the "Program All" button on the toolbar.

If all goes well, the PIC will be programmed and then verified successfully. If the verify fails, try erasing the PIC (click on the "Erase All" button) and re-run the programming.

Programming the EEPROM

Once PIC programming completes successfully, switch the programmer to Phoenix/Smartmouse (normal) mode (switch in). Now select the appropriate EEPROM device from the drop-down list on the main menu. For Gold cards, this is the 24C16 device.

At this point, you can read and/or write to the 24C16 EEPROM inside the card. You can read the contents and edit them directly in the IC-Prog window, or load and write whatever data file you desire to the EEPROM.

Note: to be able to access the on-card EEPROM, you must have enabled IC-Prog's smart card programming mode, as described under "Setting up IC-Prog" above.

Preventing card damage

The smartcard socket specified for this project uses "landing contact" technology. This means that the socket contacts do not touch the contacts on the card until it is almost fully inserted.

The advantage of this method is that there is little possibility of power and ground being momentarily connected to the wrong set of pins, as might occur with wiping contacts. It also results in less card wear.

However, to further minimise the possibility of damage to the electronic circuitry, it's important to follow a few simple rules during use. First, before inserting or removing a card, the programming software should be running (but not reading or programming, of course!). This ensures that the serial port is in a known state and that all the control lines properly initialised.

Second, do not switch modes when reading or programming is under way. If you find you've inadvertently left the mode switch in the wrong position before initiating a read or write, then simply let it complete (no damage will occur) before switching over.

Programming other cards

Our descriptions have dealt exclusively with the Gold-type wafer cards. However, this project is capable of reading and programming most PIC-based cards. It has been successfully tested with the Emerald (PIC16F628 & 24LC64) and Silver (PIC16F877 & 24LC64) cards.

Both of these cards can be programmed with IC-Prog (don't use the Card Wizard function). However, separate loader programs are required for each of the cards, as the PIC16F84 version (used with the Gold card) will *not* work with these newer devices. We're yet to find a source for PIC-16F628 & PIC16F877 loaders.

Note: this project will not work with any Atmel-based cards, such as the "Fun" card.

Now what?

Now that you can read and write a smart card, what do you do with it?

We found several simple applications, including door access control, identity card, time clocking and PC security at **www.maxking.co.uk**. You can download these free of charge but note that they are only demos and some can be a little "buggy"!

If you can program in Visual Basic or C/C++, then you'll find a well-documented API DLL for Windows at **www.gis.co.uk/p75_dl.htm**. This library gives full access to the Smartmouse interface, considerably easing the programming task.

Note that the site lists files for a number of different card readers. This project is compatible with the SM1-RS232 model.

The files of interest are named "sm12dll.exe" and "usref3_0.pdf".

More information

As usual, information on the ISO-7816 smart card standard abounds on the Internet. Point your browser to **www.google.com** and search for "ISO7816".

Microsoft and others are involved in defining standards for smart cards connected to PCs. Check out **http://msdn.microsoft.com/library/en-us/dnscard/html/msdn_smart_card.asp** and **www.pcscworkgroup.com** for details.

We've yet to find applications of a non-commercial nature that have exploited the full potential of these useful little devices. Sadly, much of the information on the Internet is related to card "hacking". Perhaps you could be one of the first enthusiasts to put them to real use! SC

ELAN Audio
The Leading Australian Manufacturer of Professional Broadcast Audio Equipment

2 Steel Court South Guildford
Western Australia 6055
Phone 08 9277 3500
Fax 08 9478 2266
email poulkirk@elan.com.au
www.elan.com.au

RMA-02
Studio Quality
High Power
Stereo Monitor
Amplifier

Designed for Professional Audio Monitoring during Recording and Mastering Sessions
The Perfect Power Amplifier for the 'Ultimate' Home Stereo System
For Details and Price of the RMA-02 and other Products, Please contact Elan Audio

Electronics Australia

Project Reprints – Limited Back Issues –Limited One-Shots

If you're looking for a project from Electronics Australia, you'll find it at Silicon Chip! We can now offer reprints of all projects which have appeared in Electronics Australia, EAT, Electronics Today, ETI or Radio, TV & Hobbies. First search the EA website indexes for the project you want and then call, fax or email us with the details and your credit card details. Reprint cost is $8.80 per article (ie, 2-part projects cost $17.60). SILICON CHIP subscribers receive a 10% discount.

We also have limited numbers of EA back issues and special publications. Call for details!

visit www.siliconchip.com.au or www.electronicsaustralia.com.au

PowerUp

Turns on all your equipment at the flick of a switch

By JOHN CLARKE

Switch on your PC and your peripherals will come on as well. Switch on your amplifier and all your hifi gear will come on too. Switch on your TV and the rest of your home theatre system will power up as well. That's the beauty of this "PowerUp" unit.

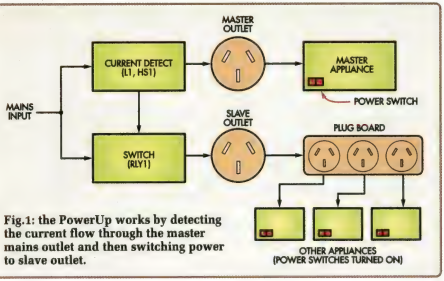

Fig.1: the PowerUp works by detecting the current flow through the master mains outlet and then switching power to slave outlet.

YOU CAN ALSO USE PowerUp in your workshop. Switch on your router or bench saw and the vacuum cleaner will suck away the sawdust straightaway. Doubtless there are other applications to save you switching on numerous other items of equipment when you want to get straight into work or play.

The PowerUp connects to the main unit such as an amplifier and switches on power to the remaining units whenever the main unit is switched on. This saves having to power up the other units separately.

PowerUp is a small box with two mains outlets, one for the master appliance and the other to run the slave appliances. This second outlet would provide power to a multi-way powerboard for the remaining appliances. When the master appliance is switched on, the other appliances will be powered up also.

PowerUp works by detecting the current flow through the master mains outlet and then switching power to slave outlet. The general scheme is shown in the block diagram of Fig.1. The current detector is a toroidal coil combined with a Hall effect device.

Circuit description

The full circuit is shown in Fig.2. Besides the Hall effect device, it uses just two ICs and a relay. The Hall sensor is placed in a slot (air gap) in a toroidal core. The master outlet current flows through the toroidal coil and generates a corresponding AC signal from the Hall sensor (HS1).

Its output is filtered with a 1kΩ resistor and 1μF capacitor which rolls off frequencies above 159Hz. The filtered output is then AC-coupled to pin 3 of op amp IC1a. Pin 3 is biased at +5V via the 100kΩ resistor from the +5V rail.

Op amp IC1a is set for a gain of 471 using the 470kΩ feedback resistor from pin 1 to pin 2 and the series 1kΩ and 10μF capacitor to the +5V rail. The 10μF capacitor rolls off frequencies below 16Hz. Frequencies above 154Hz are rolled off by the 2.2nF capacitor across the 470kΩ feedback resistor between pins 1 & 2.

Op amp IC1b is wired as a precision half-wave rectifier by virtue of diodes D5 and D6 which are connected within the feedback loop. The rectified signal at D5's anode is filtered with a 100kΩ resistor and 10μF capacitor so that the result is a DC voltage proportional to the signal from the Hall sensor.

IC2a is half an LM393 dual comparator wired as a Schmitt trigger. It monitors the filtered DC signal at pin 6 and compares it to the threshold voltage at pin 5. Pin 5 is connected to the 5V rail via a 4.7kΩ resistor and also to trimpot VR1 across the 5V rail. A 1MΩ positive feedback resistor to pin 7 applies hysteresis.

Hysteresis means that the pin 5 voltage is at a different level, depending on whether the output at pin 7 is high or low. When pin 7 is low, pin 5 is pulled a few millivolts lower via the 1MΩ resistor and if pin 7 is high, pin

This is the view inside the prototype. The toroidal coil on the PC board operates at mains potential and is protected by a Prespahn insulation cover (see text).

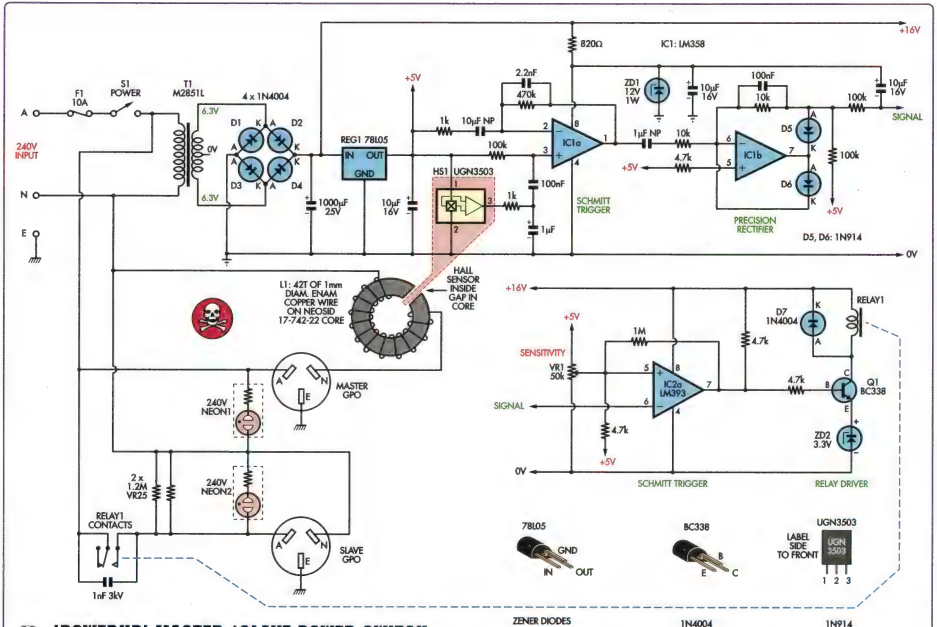

'POWERUP' MASTER/SLAVE POWER SWITCH

Fig.2: the complete circuit diagram. IC1a amplifies the signal from the Hall sensor and feeds it to precision rectifier stage IC1b. IC1b's output is then fed to Schmitt trigger stage IC2a which drives Q1 and the relay to switch in the slave GPO.

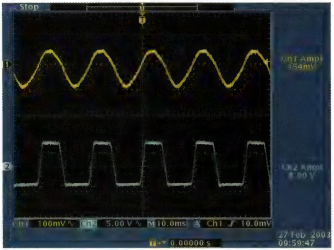

In this oscillogram, the top trace shows the Hall effect signal when connected to a 60W mains load. This is amplified to 8.9V peak-to-peak by IC1a (lower trace).

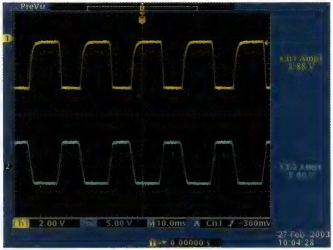

IC1a's output (lower trace) is rectified by IC1b (top trace). This rectified signal is filtered and fed to the Schmitt trigger to control the relay.

5 is pulled a few millivolts higher. This ensures that small variations in DC input voltage to pin 6 do not cause the output to oscillate high and low.

Trimpot VR1 sets the trigger threshold for IC2a. This is normally set at around mid-position. Setting it slightly towards the 5V supply will trigger the Schmitt at small signal levels from IC1, while setting it towards the 0V rail will mean that the signal needs to be greater before IC2a's output will go high.

When pin 7 of IC2a does go high, it drives transistor Q1 to turn on relay RLY1 which then applies 240VAC to the slave GPO socket.

The 3.3V zener diode in Q1's emitter to ground connection reduces the voltage applied to the relay to around 12V rather than above 15V.

Power for the circuit comes from a 12.6V transformer. It drives a bridge rectifier (D1-D4) and a 100µF capacitor to provide about 16V DC. This supplies IC2 and the relay. IC1 is powered from +12V, derived using a series 820Ω resistor and 12V zener diode (ZD1). The Hall effect sensor is fed with 5V from a 78L05 regulator (REG1) and this also provides the input reference for IC1a, IC1b and IC2a. IC2b is not used.

Mains power indication

Both GPO sockets have a neon indicator wired across them to indicate when power is present. Neon 2, across Active and Neutral for the slave GPO outlet, lights when the relay contacts are closed. The relay contacts are shunted with a 1nF 3kV capacitor which prevents contact arcing when power is removed. The capacitor also allows a small amount of current to flow when the relay is open and this is sufficient to dimly light Neon 2 even though it has two 1.2MΩ resistors connected across it.

In practice though, this is not a problem because Neon 2 lights quite brightly when it should; ie, when power is available at the salve GPO socket.

Use mains rated cable for all mains connections and bind the wires with cable ties to prevent them coming adrift. Note that all exposed mains connections should be covered with heatshrink tubing.

Construction

The PowerUP circuit is built on PC board measuring 79 x 140mm (coded 10107031). It is housed in a plastic case measuring 165 x 85 x 55mm, with two chassis-mount GPO (general purpose) sockets on the lid.

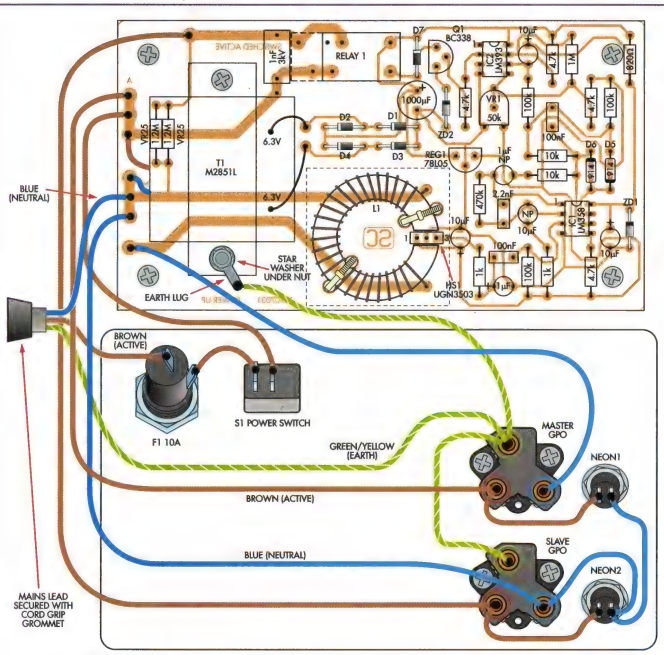

NOTES: 1. COVER COIL L1 AND HALL SENSOR HS1 WITH PRESSPAHN INSULATION (FOR DETAIL SEE SEPARATE DIAGRAM).
2. COVER MAINS CONNECTIONS TO FUSEHOLDER, POWER SWITCH S1 AND NEON LAMPS WITH HEATSHRINK INSULATION SLEEVING.

Fig.3: follow this wiring diagram exactly to build the PowerUp. In particular, take care to ensure that all parts are oriented correctly and that the mains wiring is installed in a professional manner.

You can begin assembly by checking the PC board against the published pattern of Fig.6. There should not be any shorts or breaks between tracks. If there are, repair these as necessary.

Then insert and solder the PC pins and the resistors. Use Table 2 as a guide to the colour codes for the resistors. **Note that the two 1.2MΩ resistors must be high-voltage Philips VR25 types or equivalents. Do not substitute for these.**

Next, insert and solder in the zener diodes, diodes and trimpot VR1, taking care with the positioning of ZD1 and ZD2. The ICs can be installed next, taking care with their orientation. The LM393 is placed adjacent to Q1.

When installing transistor Q1 and the 78L05 regulator, take care that you don't get them confused; they look the same!

The capacitors can be installed next. Table 1 shows the codes on the MKT and ceramic types. **Make sure that the leads of the 3kV ceramic capacitor are covered with 5mm long insulating sleeving, before inserting it into the PC board.**

The electrolytic capacitors must be oriented with the polarity as shown, except for the two non-polarised (NP) types which can be mounted either way around. The relay is mounted next. We have provided for different

Table 1: Capacitor Codes

Value	µF Code	EIA Code	IEC Code
100nF	0.1µF	100n	104
2.2nF	(.0022µF)	2n2	222
1nF	(.001µF)	1n0	102

relays (as specified in the parts list).

Making the toroidal inductor

As noted above, the toroid inductor (L1) is slotted to take the Hall sensor. Cutting a 2mm slot in a ferrite toroid is almost impossible because the material is so brittle but the specified powdered iron toroid is quite easy to cut with a hacksaw.

Clamp the toroid lightly in a vice; if you over-tighten the vice, it is likely to crack the core. After you have cut through one side of the toroid, you will need to enlarge the slot to about 2mm with a small file. Just make it sufficiently wide so that the Hall sensor can easily slide into the slot.

Now wind 42 turns of 1mm diameter enamelled copper wire onto the toroid and strip the insulation from the wire ends. That done, place this assembly in position on the PC board with the slot directly over the position for the Hall sensor. Finally, solder the wires in position and secure the inductor with cable ties.

You can now insert and solder in the Hall sensor, taking care with its orientation. The correct position is with the sensor body centrally located in the toroid slot.

Working on the case

The first step here is to drill out and file the hole in the end of the case for the cordgrip grommet. This hole must be a tight fit to make sure that it securely anchors the mains cord.

Parts List

1 PC board, code 10107031, 79 x 140mm
1 plastic case, 165 x 85 x 55mm (Altronics Cat. H-0306)
2 chassis-mount GPO sockets (Altronics Cat. P-8241 or equivalent)
1 12.6V 150mA mains transformer (Altronics Cat. M-2851L or equivalent)
1 10A 250VAC SPST (or SPDT) relay (Altronics Cat. S-4250A, S-4170A or equivalent)
1 6A SPST 250VAC mini mains rocker switch
2 250VAC Neon indicators (Altronics Cat. S-4016 or equivalent)
1 M205 panel-mount safety fuse holder (F1) (Altronics Cat. S-5992, Jaycar Cat. SZ-2028)
1 M205 10A fuse
1 7.5A mains cord and moulded 3-pin plug
1 ring type crimp lug for 1.5-2.5mm diameter wire
1 70 x 70 piece of Prespahn insulating material
1 powdered iron toroidal core 33mm OD x 20 ID x 10mm (Neosid 17-742-22; Jaycar LO-1244; L1)
1 50kΩ horizontal trimpot (coded 503) (VR1)
2 M3 x 10mm screws
2 M3 nuts
2 3mm star washers
1 2m length of 1mm enamelled copper wire
1 400mm length of 7.5A brown 250VAC-rated wire
1 400mm length of 7.5A blue 250VAC-rated wire
10 100mm long cable ties
10 PC stakes
1 80mm length of 3mm diameter heatshrink sleeving for mains to PC stake connections
1 40mm length of 6mm diameter heatshrink sleeving for switch terminals
1 100mm length of 13mm diameter heatshrink sleeving for fuseholder and Neon indicators

Semiconductors

1 LM358 dual op amp (IC1)
1 LM393 dual comparator (IC2)
1 UGN3503 Hall sensor (HS1)
1 78L05 3-terminal regulator (REG1)
1 BC338 NPN transistor (Q1)
1 12V 1W zener diode (ZD1)
1 3.3V 1W zener diode (ZD2)
5 1N4004 1A diodes (D1-D4,D7)
2 1N914 diodes (D5,D6)

Capacitors

1 1000µF 25V electrolytic
3 10µF 16V electrolytic
1 10µF 50V NP (non-polarised) electrolytic
1 1µF 16V electrolytic
1 1µF 50V NP (non-polarised) electrolytic
2 100nF (0.1µF) MKT polyester
1 2.2nF (.0022µF) MKT polyester
1 1nF (.001µF) 3kV ceramic

Resistors (1%, 0.25W)

2 1.2MΩ Philips VR25 (don't substitute)
1 1MΩ
1 470kΩ
3 100kΩ
2 10kΩ
4 4.7kΩ
2 1kΩ
1 820Ω

Table 2: Resistor Colour Codes

No.	Value	4-Band Code (1%)	5-Band Code (1%)
2	1.2MΩ (VR25)	brown red green yellow	N/A
1	1MΩ	brown black green brown	brown black black yellow brown
1	470kΩ	yellow violet yellow brown	yellow violet black orange brown
3	100kΩ	brown black yellow brown	brown black black orange brown
2	10kΩ	brown black orange brown	brown black black red brown
4	4.7kΩ	yellow violet red brown	yellow violet black brown brown
2	1kΩ	brown black red brown	brown black black brown brown
1	820Ω	grey red brown brown	grey red black black brown

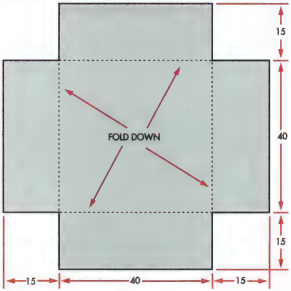

PRESPAHN INSULATION COVER FOR L1

Fig.4: this diagram shows how to make the Prespahn insulation cover that fits over coil L1.

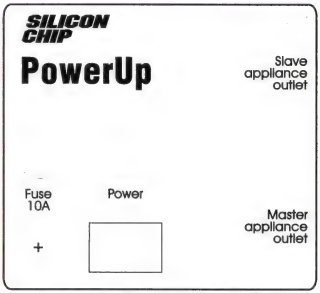

Fig.6: this full-size front-panel artwork can be used to mark the mounting positions for the fuseholder and the Power switch.

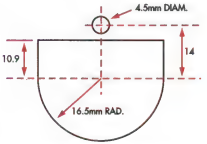

CUTOUT DETAILS FOR GPOS

Fig.5: use this template to mark the cutouts and mounting holes for the two GPOs.

Specifications

Power level to switch slave GPO	1-25W adjustable
Maximum load (master and slave GPO)	6A or 1440W (set by S1)
Standby current	18.5mA

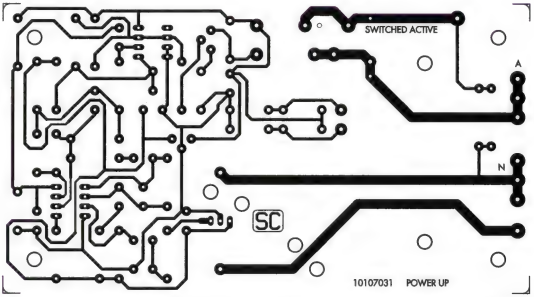

Fig.7: check your PC board against this full size etching pattern before installing any of the parts.

Next, mark out and drill the front panel for the mains outlets, switch, Neon indicators and fuse holder. The cutting template for the GPO sockets is shown in Fig.5. You can then fit the front panel label (if available), the GPO sockets, the Neon bezels, the switch and the fuseholder.

Note that the fusholder must be a safety type, as specified in the parts list. Do not use a standard fuseholder.

The PC board can now be mounted in position using the screws supplied with the case. Once it's in, you can complete the wiring as shown in Fig.3.

Note that all mains wiring must be run in 7.5A 250VAC-wire. The earth connections are soldered or crimped to the solder lugs using green/yellow mains wire and secured to the transformer case using an M3 x 10mm metal screw, nut and star washer.

Make sure the transformer case is indeed earthed by measuring with a multimeter for a low ohm reading between earth and the transformer metal body. It may be necessary to scrape the lacquer coating off the transformer mounting foot to allow a good contact. Secure the other side of the transformer using an M3 x 10mm screw, star washer and nut.

Use heatshrink sleeving over any bare terminals. You should also tie the wires with cable ties to prevent them breaking and coming loose from their terminations. Make sure that the mains cord is securely anchored to the case with the cord grip grommet.

Inductor L1 has 240VAC flowing through it and to improve safety, this is covered with a Prespahn cover folded from a 70 x 70mm square piece of the material. Cut out 15mm squares on each corner and fold down. Fig.4 shows the details.

The cover sits over the toroid inductor and its connections to the PC board. This can be secured to the PC board with some silicone sealant.

Adjusting VR1

Trimpot VR1 is initially set to the midpoint. Once that's done, fit the lid, plug in the appliance to be used as the master (computer, stereo amplifier or whatever) and apply power.

Now turn on the master appliance. If Neon 2 does not light, you will need to disconnect the power and adjust VR1 – ie, turn it clockwise by a small amount. **Note: this should be done with the PowerUp's power cord disconnected from the mains wall socket (see warning panel).** You then redo the test and repeat the procedure again, as necessary.

VR1 is adjusted correctly when Neon 2 is on when the master appliance is switched on and off when the master appliance is switched off. If the Neon is always alight, adjust VR1 further anticlockwise.

WARNING: MAINS VOLTAGES!

Note that this circuit is connected to the 240VAC mains supply and is potentially lethal. While most of the electronics circuitry is isolated from the mains, it is possible that you could make contact with a live part. In particular, note that inductor L1, the two 1.2MΩ resistors, the 1nF 3kV capacitor and the Neon indicators all operate at 240VAC.

Do not touch any part of the circuit when it is plugged into a mains outlet. Always remove the plug from the mains before working on the circuit or making any adjustments.

Troubleshooting

If the circuit does not work, switch off power and unplug the unit from the mains. Then check your work for correct wiring and parts placement.

You can check the supply voltages for each IC using mains-rated probes on your multimeter but take care not to touch any part of the circuit with your hands. IC1 should have 12V between pins 4 & 8, while IC2 should have about 15V or 16V between pins 4 & 8. The output from REG1 should be 5V. SC

SILICON CHIP

Car Projects, Volume 2

THE PROJECTS: High-Energy Universal Ignition System; High-Energy Multispark CDI System; Programmable Ignition Timing Module; Digital Speed Alarm & Speedometer; Digital Tachometer With LED Display; Digital Voltmeter (12V or 24V); Blocked Filter Alarm; Simple Mixture Display For Fuel-Injected Cars; Motorbike Alarm; Headlight Reminder; Engine Immobiliser Mk.2; Engine Rev Limiter; 4-Channel UHF Remote Control; LED Lighting For Cars; The Booze Buster Breath Tester; Little Dynamite Subwoofer; Neon Tube Modulator.

ON SALE AT SELECTED NEWSAGENTS

Or order by phoning (02) 9979 5644 & quoting your credit card number; or fax the details to (02) 9979 6503; or mail your order with cheque or credit card details to Silicon Chip Publications, PO Box 139, Collaroy, NSW 2097.

Mail order prices:
Aust: $14.95 (incl. GST & P&P)
NZ/Asia Pacific: $18.00 via airmail
Rest of World: $21.50 via airmail

SERVICEMAN'S LOG

Faults in unfamiliar models

Fault-finding in an unfamiliar model can be a real challenge, especially if you don't have a circuit diagram. And if someone else has had a go at the set first, it can really make life difficult.

"Where do I start?" – that's often a question I ask myself when faced with an unusual fault or an unfamiliar model, especially when there are few obvious clues.

Normally, I try to find the likely area and then proceed to concentrate on that. For example, if there is no line drive, I start by measuring the voltage/waveform on the collector of the horizontal driver transistor and go from there, each time halving the number of components to be tested.

Recently though, I've had a few cases which made this procedure futile because the faults could have been anywhere. I was therefore reduced to probing various circuits in the hunt for clues.

Samsung CB-564BV TV set

The first set I was faced with was a 1999 Samsung CB-564BV, using an S51A chassis. This set is somewhat unusual as it employs a widescreen 53cm picture tube. However, it is not a real 16:9 widescreen set – rather it has an 11:8 ratio although the on-screen menu does offer 16:9 (but it is overscanned). Apart from that, the set had no special features.

The set had died after a thunderstorm and the symptoms were that it would pulsate every three seconds, with no sound or picture. If allowed to remain in this mode for a while, you could actually see it trying to give a blurred raster momentarily before switching off. It was as though someone was switching it on and then immediately off with a remote control.

Unfortunately, I had to order a service manual in especially for this set and even then I couldn't get the right model. What's more, it didn't arrive until two weeks after I had started the repair.

I began my investigations by measuring the output from the chopper supply to find that all was OK. The voltages were much as I had expected and were similar to other Samsung models I had seen. In particular, the outputs I measured were at 130V, 16V and 12V and these rails were all steady, varying only with the load as the set switched on and off. In addition, there

were healthy line pulses coming from the horizontal output transistor (Q403) and there was EHT.

These sets employ a complicated arrangement of switchable IC regulators. These are IC803 (KA78R05, 4-pin) and IC804 (KA7630, 10 pin) and they deliver +5V and +8V rails respectively. These regulators are also "tied up" with the power-on, reset, disable and protection circuits.

Having decided that the primary power supplies were OK, I decided to investigate how the set is switched on and off normally. After all, it appeared that the low voltage supplies were being turned off, possibly because of a fault condition elsewhere in the set.

As it turned out, the low-voltage supplies are controlled by pin 18 of microprocessor IC901 (Zilog 4202 SZM-503ATS). When this pin goes high, the low-voltage IC regulators turn on and supply 8V to pins 12 and 37 of the jungle IC (IC201, TDA8843). And that was exactly what was happening except that something was also switching it off almost immediately. LED LD901 (a combined LED) was also flashing yellow every three seconds too.

My next step was to disconnect the remote receiver from pin 19 of IC901 in case that was randomly switching the set on and off. It wasn't, so I checked the EEPROM (IC902, K24-CO41) by substitution but it too made no difference. I then found that the SCL and SDA rails had digital noise on them and were at +5V DC.

Next, I desoldered pin 18 of IC901 and applied 5V to the track leading to it to see if the set would switch on and stay on. My reasoning was that this would at least tell me whether it was the microprocessor control circuit that was the cause of the problem.

The result surprised me – the set came on and then went off and stayed off until I switched it off and on with the main switch.

And so, despite all this measuring and testing, I still really wasn't sure where the fault might be. The service manual arrived and wasn't much help either. It showed all sorts of circuits I had hoped would help me, such as x-ray protection, but in the end I discovered these options hadn't even been fitted.

By now, it was beginning to look as though I would have to order and replace several large and expensive ICs to confirm whether or not they were working.

Finally, I solved the problem in a rather roundabout way. As I said earlier, if you left the set on, you could get a pulsating raster totally out of focus. However, the FBT focus control made no difference to it at all.

After examining this series of events more closely, I came to the conclusion that the picture was projected up and reflected onto the screen – ie, that the foggy picture I was observing was due to reflections within the picture tube. And that indicated that there may be a fault in the vertical timebase that was triggering an internal data fault signal.

I now concentrated on IC301 (LA-7845) and its seven pins. There was +16V on pin 6 and -16V on pin 1 and there was a nice sawtooth appearing in pin 4 (VDM). However, the waveform on pin 2, which goes to the deflection yoke, was not correct. I was expecting its DC voltage to be around 0V but instead I was getting nearly 16V, which accounted for the raster not being on the screen.

I also noticed that there was no sandcastle waveform from Q302's collector and I was getting even closer when I discovered that there was no waveform (VDP) to pin 5 of IC301. Because it was easier, I spent some time measuring and replacing components around IC301 (especially C302) before moving the scope probe to pin 46 of IC2301. There was no signal coming out of this pin, so I desoldered it and checked it with an ohmmeter – it measured a dead short to ground.

At last I had some sort of a clue that a component was at least faulty but was it enough to switch the set off? I tried switching the set on again with the pin disconnected but it still pulsated.

However, as there was definitely a fault on pin 46, IC201 (TDA8843) needed to be replaced. The problem was the cost – $67.65 trade plus an ETA of 6-10 weeks delay! In the end I was able to scrounge a secondhand TDA8844 from a scrapped Philips TV and fitted that.

And that, as they say, was that. After refocussing, the raster was restored permanently in the centre of the tube. The lack of sound was due to it either coming on in AV mode or muted because there was no signal. I used a similar remote from another set which was enough to get into the OSD menus and go through the setup options before returning the set to the customer.

Items Covered This Month

- Samsung CB-564BV, S51A TV set
- Philips 25CE6270/10B TV set – CP110 chassis.
- Sony KV-20PS1 TV set
- Philips 41 GR8840/75B projection TV set

OHMMETER MEASURING A DEAD SHORT TO GROUND...

Philips TV set

The second story concerns a 1989 Philips 25CE6270/10B with a CP110 PZ1 chassis. Despite its age, I hadn't worked on this model before – probably because there aren't too many of them and they are all probably fully imported from Belgium.

This set belonged to an elderly lady pensioner who wasn't too wealthy. She complained that the set had previously been taking some time to come on and was now dead.

After examining it, I could see it wasn't due to dry joints and that fixing it was going to be expensive and probably not worth it. However, she definitely could not afford a new set so I decided to give it a go.

Back at the workshop, I replaced the failed parts, namely fuse F1652,

bridge rectifiers D6657 and D6658, chopper transistor 7665 (BUT11AF), IC7669 (TEA1039) and resistors R3658 (120Ω) and R3659 (100Ω). This restored the sound and picture – but only just. The fault now was that the set was pulsating rapidly and the main 140V rail was fluctuating wildly.

Once again, I wasn't really sure quite where to start. Was the fault in the primary or secondary of the power supply, or was it in the horizontal output stages or even the east-west circuit? Another possibility was that it was in the microprocessor circuitry as the set still didn't always want to start, leaving error messages in the display.

I also noticed that the spark gaps on the CRT board would occasionally flash over at switch on. That left open the possibility that it could even be the tube that was faulty.

In the end, I decided that it was most likely to still be in the power supply. In particular, I suspected that it wasn't regulating properly.

I ordered a service manual and meanwhile worked on what I could. I started with the electrolytic capacitors on the secondary supply rails (+25V, +140V, +32V, +15V, +12V, +9V and +6V), replacing any that were leaky (C2670 and C2621 were particularly bad). I then substituted a 60W globe for the line output load by disconnecting plug R13 and connecting the globe between pin 5 of this plug and ground.

However, the 140V rail was still unstable and varied a lot with a 100W globe as the load. It could, however, be adjusted using VR3670, but it would not remain steady.

When the service manual arrived, I found some notes on some modifications. These involved removing C2657 from the base of the chopper transistor to ground (live side), fitting a 39Ω resistor across L5656 and changing C2661 from 1500μF to 2200μF. These modifications slightly improved the stability of the 140V rail and encouraged me to continue working in that area.

Next, I replaced the 7670 optocoupler (it is marked as a CNX62 on the circuit but a CNX82A was fitted), followed by 6.2V zener diode ZD66676 which is on the feedback reference line. However, these changes made little difference.

What's more, I was being continually frustrated with differences between the circuit and the set itself. For example, mine had an extra module with an SCR (TR7000) fitted on the 15V rail.

At this stage, I noticed that the set performed differently when it was hot compared to when it was cold. In particular, when TR7666 (BD337) in the primary of the Self-Oscillating Power Supply was hit with freezer, there was a big change in the set's performance. I removed this transistor (which in reality was a BC337-25, the "25" signifying a higher hfe) and measured it very carefully. I could find absolutely nothing wrong with it – there was no detectable collector-emitter reverse leakage and its hfe was 175, but I couldn't see that as being significant.

A new one measured 190 but I fitted it anyway, not expecting much. Fortunately, for some unknown reason, I was wrong; at last the set was stable and I could adjust the 140V rail exactly. It looked as though all my problems had come to an end, so I put the set aside to soak test.

But that wasn't the end of it – most of the time, the picture was fine but just occasionally, the set would bloom a bit when there were bright objects in the picture. What's more, when the set was switched off, it was not always starting up again – particularly in the morning. This got particularly bad when we had a bit of damp weather.

To troubleshoot this problem, I connected a meter to the 140V rail so that it could be monitored while the set was soak testing.

These symptoms continued randomly and sometimes it was very hard to even start the set at all, although the +140V rail was continuously spot on. Occasionally, however, the display gave an error number such as F3 (IC7840 microprocessor) but this varied.

What on earth was I missing? The spark gaps on the CRT board now arced nearly every time I switched the set on and yet the EHT remained constant.

Next, I measured the back-up battery and found that it was completely dead. This component failure has been enough to cause many strange faults in Philips TVs but no such luck in this case. By now, I was pretty well satisfied that the power supply was functioning correctly, so I decided to spend some time investigating the line output stages.

One possibility was that the insulation was breaking down and there was a momentary excess of EHT, causing the spark gaps to flash and the microprocessor to detect a failure. I followed up a lot of stray dead end leads, such as tuning capacitors and even the picture tube before I decided to check out the CRT earthing of the aquadag. It didn't seem possible there could be anything wrong with this circuit, as I could see clearly no less than two leads going from the aquadag earth strap to the CRT socket. However, my ohmmeter could not read a path to the chassis ground.

I didn't panic here either because Philips is one of the few manufacturers that used to keep the CRT aquadag at about 15V and use it as part of the flyback beam limiting circuit, as in

the CP90 circuit diagram (remember the K9, K11 series?). My next step then was to examine the circuit to find out what was happening.

Unfortunately, the circuit diagram was a bit ambiguous when it came to this vital bit of knowledge. The CRT circuit clearly shows the aquadag to be grounded but does not show where. So where was the strap to the chassis ground? There wasn't one, so I connected a crocodile clip from the CRT earthing strap to the chassis metal work. Bingo! – all the fault symptoms immediately disappeared.

What had happened? I can't be 100% sure but it turned out that someone else had looked at the set previously and hadn't been able to fix it. So I can only surmise that they took the lead off and either lost it or forgot to replace it.

I couldn't find it in my heart to charge the lady for all the time it took to fix these faults.

Sony Profeel TV system

The Sony Profeel TV system was a big step into the semi-professional market, offering for the first time (in 1982) a component video system. It is all of course ancient history now, and most of it is now landfill.

For reasons that I refuse to go into, I got conned into repairing a KV-20PS1 (using an HF SCC-428A-A chassis). The fault was no colour and this is a multi-system monitor with a complex chroma B board. In the days when Arthur was a boy, the Sony PAL boards were hard enough to troubleshoot but here we are talking about an automatic multi-system job!

Fortunately, the decoders are split between SECAM and PAL/NTSC I and II, with IC301 (PC1365C) being mostly PAL.

Despite the writing being very small and faint, I was blessed by having a service manual you could die for these days. The circuit detail was excellent, showing waveforms, voltages and even the block diagram inside the IC – all in one diagram.

The first thing I was looking for was the PAL colour killer so that I could override it and see what sort of colour – if any – was getting through. This turned out to be RV309, which fed pin 13 to the "ID killer" – 5.9V for colour, 7.3V for monochrome. I marked the position of the control and then twiddled it but it had no effect.

I checked the voltage on pin 13 and it never dropped below 8.7V. I then checked the earthing for the control circuit and also checked R324 (220kΩ) but all was OK. I was about to suspect the IC when I noticed another connection to pin 13. Following its tortuous path, I got to R384 (100kΩ) and plug B-2 (pin 41). Following the harness further, I reached a small slide switch (SW901) on customer control panel H and marked "SECAM" and "AUTO".

In the "AUTO" position, this lead went nowhere but in the "SECAM" position, it was connected to +12V (B-2 pin 42). There was 8.7V on one side of R384 and 12V on the other – no matter what position the switch was in! Disconnecting R384 restored the colour and the voltage on pin 13 dropped to +5.9V.

Unfortunately, the slide switch is located in an extremely inaccessible place, beneath the picture tube. And you could see from the scuff marks on the front panel that this switch had been used a lot and was pretty worn. A replacement fixed the problem, although cleaning the old one would probably have been sufficient. Alternatively, if the client hadn't been using SECAM, it could have simply been disconnected completely.

Philips projection TV

One morning, a young lady phoned and asked if I would go to her mother's house and repair her "telly" as soon as possible. Naturally, I immediately asked for the brand and model number of the TV but the somewhat agitated woman was unable to give me any further information except to tell me that it was a very large flat-screen set.

"Is it a plasma set", I asked. She didn't know, nor did she know how old it was. She just wanted me to fix it as soon as possible because her mother was phoning her about it every five minutes and giving her hell. It appeared that television totally dominated her mother's life.

I "rocked up" at her mother's extremely expensive residence about 30 minutes hour later and was immediately impressed by its opulence and breathtaking views. Yep, this would have to be a plasma TV – they could definitely afford it.

The entrance to the mansion was on the top floor, next to a massive garage, and was opened via a security system. Walking down a grand marble staircase, I finally met a large woman who turned out to be the anguished mother. She led me down to the spacious TV room, where I was extremely disappointed to find an ancient projection TV set – a 1989 Philips 41 GR8840/75B using a G110-PTV chassis.

The mother, who was Greek and had only limited English, was extremely friendly and was delighted that I was at last going to fix her faulty

TV ("the TV – shea no work!"). I started by checking that it was plugged into a working power point and that the aerial connection looked intact. I then tried the remote – but nothing happened so I tried the front-panel controls and managed to switch it on but could not determine what channel it was on straight away.

Because the room had large windows with no curtains and it was a bright day, it took some time before I realised that there was a picture on the screen. However, it was extremely dim. "Mama", it turned out, only wanted to watch her two Greek channels on Foxtel but it was extremely difficult for me to establish what these were from her limited English.

After a few desperate calls to her daughter, I eventually discovered what they were (46 and 51) and tuned them in on the set-top box by hand. However, none of the remote controls were working which seemed rather strange. These included the Foxtel remote, the Philips remote (for the TV) and a Panasonic remote for the VCR – none worked, not even with brand new batteries.

After some more phone calls to the daughter, it transpired that they were all working the day before. This was just too much of a coincidence.

Finally, the penny dropped when she managed to tell me that "they mussa work, I cleaned them this morning". Cleaned them? Well, actually it turned out she had washed them by completely immersing them in suds and water in the sink before drying them.

OK, so it's not the end of the world, except that the Foxtel and Philips remotes are manufactured with their outer case shells glued together. And that means that they are unserviceable and have to be replaced.

I explained this as best I could and I think she understood. I also said it was time to buy a new "televis" since the old one delivered a very washed out picture. However, she was so ecstatic that her favourite Greek channels had been restored that I don't think she really took this on-board.

She proffered a new $100 bill to pay for the service call but I didn't have change and told her I would take a cheque. She understood this part exactly and next we were climbing the marble staircase to her garage. Inside the garage, she opened the boot of her immaculate Roll Royce, retrieved her cheque book and proceeded to write me one out!

It was all slightly bizarre and somewhat amusing. The faults with the projection TV were not insurmountable but she really could probably afford several plasma TVs.

The remote (RC5903/21) is cheap enough to order in and the dull picture is probably due to the heat transference liquid in the projection lenses. However, if you follow the full procedure in the service manual and order the coolant kit (4822 310 57233), you won't get much change out of $200 and it takes all day make the changeover.

The TV coolant fluid is optical grade (99.5% pure) 70% mono denatured ethylene glycol and 30% glycerol/glycerine and can be obtained from the Internet or by email from sales@matelectronics.com for only US$6.95 (Part No. RCA 212072-16) for a 500ml (approx.) bottle! However the freight is expensive (US$42.20).

I bought four bottles, though three is more than enough and you might get away with just two, which will cost you $A128 landed in Sydney. If you are careful – and care is the operative word throughout all this – you really only need one bottle per CRT. This stuff is not only poisonous and toxic but is also corrosive. If you drop some onto the PC board below you will probably ruin the set forever, no matter how hard you try to clean up the mess afterwards!

So changing it is a bit of a challenge. If you follow the service manual, you will remove each CRT, disassemble it, change the sealing coupler and O-ring seal, etc, and then reassemble it. You will then spend hours realigning them.

Alternatively, you can take obsessive care, do it in-situ, and raise the corners of the cabinet until the face of the CRT you are working on is absolutely level. You then remove four black 1/4-inch hex screws and take off the lens assembly before unscrewing four 5/16-inch nuts and removing the C-lens (round concave cup lens) to expose the fluid.

This fluid has to be removed completely – I use a large pipette to suck it out and finally use a cloth to get the last bit out. You will then find that the front of the CRT is discoloured and will have to clean and polish the tube front with "Windex". The amount of "dirt" will vary from colour to colour. The algae grow best (or worst) in the blue and green tubes, while the red tube is often not too bad.

When you are satisfied the cavity is pristine clean, you can pour the new coolant in, taking care to ensure there are no bubbles. After that, you have to reassemble the cleaned lenses in the reverse order. And that's it – the difference in the picture will be amazing.

Note, however, that if there is insufficient coolant, you will burn the screen and replacement tubes are extremely expensive. Fortunately, this procedure is probably only needed once during the set's lifetime.

The other common failure in this series of TV is the EHT splitter (4822 218 20809) besides, of course, all the usual G110 chassis faults. **SC**

Silicon Chip Binders

REAL VALUE AT $12.95 PLUS P&P

- ★ Heavy board covers with mottled dark green vinyl covering
- ★ Each binder holds up to 12 issues
- ★ SILICON CHIP logo printed in gold-coloured lettering on spine & cover

Price: $A12.95 plus $A5.50 p&p each (Australia only; not available elsewhere). Buy five and get them postage free.

Just fill in & mail the handy order form in this issue; or fax (02) 9979 6503; or ring (02) 9979 5644 & quote your credit card number.

Winter Bargains

July 2003 ISSUE

7" TFT LCD Widescreen* Colour Monitor with Infrared Remote

In-car and home entertainment system ideal for watching DVD's, PS2, XBOX etc.
- On screen display for all controls.
- Includes a slim and stylish remote control.
- Extremely high picture quality & stable performance
- Mirror image function
- 7" Widescreen TFT (thin film transistor) Active Matrix System for optimum performance.

***Will work with most, but not all widescreen sources. Will default to modified widescreen in some cases.**

5.6" VERSION COMING SOON!

New

NOW AVAILABLE

Cat. QH-3752 $499

Backlit Temperature DMM

- Professional Look
- Data Hold
- Continuity Buzzer
- Transistor/Diode Test
- Temperature
- Backlight
- 3.5 Digit
- Overload Protected
- Holster Included

See 2003 Cat Pg 233 for Details.

New

Cat. QM-1526 $29.95

12V Diversity TV Tuner with IR Remote

- Dual antenna system for excellent reception with dual AV inputs and dual video outputs for multi-screen applications
- Stereo RCA audio output for amplifier connection
- Audio can be transmitted to your car stereo or FM receiver
- Includes a slim and stylish remote control

New

Cat. QM-3755 $379

TUNER AND MONITOR PACKAGE

7" Monitor/Tuner
Cat. AA-0116

Cat. QM-3752 $499.00
Cat. QM-3755 $379.00
Normally $878.00

Now Only $838

SAVE $40

Gold Wafer Card

A multi-chip smart card based on the PIC16F84A and coupled with a 24LC16B EEPROM.

Cat.	Qty 1+	Qty 10+	Qty 25+
ZZ-8800	$19.95	$17.70	$15.70

Fun Wafer Card

An ATMEL based smart card with a AT90S8515A and coupled with a 24LC256 EEPROM.

Cat.	Qty 1+	Qty 10+	Qty 25+
ZZ-8806	$34.95	$31.45	$27.90

Silver Wafer Card

A multi-chip smart card based on the PIC16F877 and coupled with a 24LC64 EEPROM.

Cat.	Qty 1+	Qty 10+	Qty 25+
ZZ-8810	$29.95	$26.90	$23.70

Emerald Wafer Card

A multi-chip smart card based on the PIC16F628 and coupled with a 24LC64 EEPROM

Cat.	Qty 1+	Qty 10+	Qty 25+
ZZ-8820	$34.95	$31.45	$27.90

Full Function Smart Card Reader/Programmer Kit

NEW KIT

Ref: Silicon Chip July 2003
In January 2003, we released the Phoenix Type Smart Card Reader/ Reprogrammer Kit. It provide a great tool for accessing the EEPROM data of many popular Gold cards. Now we have a new design, which will program many blank Gold, Silver, and Emerald wafer cards (with relevant loader software) which conform to ISO-7816 pinout standards. PC connection is via serial port, and the PCB can powered from a plugpack, 9V battery or your ATX power supply. Kit supplied with PCB, card socket, and all specified electronic components.
•Jaycar Electronics and Silicon Chip Magazine will not accept responsibility for the operation of this device, its related software, or its potential to be used for unlawful purposes

Cat. KC-5361 $49.95

OVER 5,500 PRODUCTS IN STORE JAYCAR ELECTRONICS

OVER 5,500 PRODUCTS IN STORE JAYCAR ELECTRONICS

PLUG N VIEW

Surveillance System

The 'Plug 'N View' do-it-yourself surveillance system is designed for quick and easy installation, yet can be used to develop sophisticated video monitoring systems. The range consists of a series of cameras, monitors and switchers that simply plug together to form customised surveillance solutions. All camera's in the range use a single cable to carry power, video, audio and PIR signals (where applicable) to simplify installation and operation. But don't be fooled by the simplicity, the Plug 'N View system is capable of very sophisticated performance.

All Plug 'N' View Surveillance Equipment Available Now

3 EASY STEPS TO PLUG N VIEW

1 - Pick a Camera

2 - Pick a Monitor or TV & Switcher

3 - Plug them in

B&W CCD Indoor Camera with IR Illumination

NEW

This 'Plug 'N View' indoor camera is fitted with six powerful infrared LEDs and will illuminate objects up to 5 metres away. The camera is housed in a grey plastic case with an adjustable wall bracket and is fitted with a 2 metre signal/control cable and includes an 18m extension.

- 380 TV Lines Resolution

PLUG N VIEW

Cat. QC-3712 $89.95

B&W CCD Outdoor Camera in Metal Case with IR Illumination

NEW

This compact outdoor 'Plug 'N View' camera is housed in a weatherproof metal case and fitted with six powerful IR LED's. The rugged metal case has an adjustable wall bracket and is fitted with a 2 metre signal/control cable and includes an 18m extension.

- 380 TV Lines resolution

Cat. QC-3714 $109.95 PLUG N VIEW

12" B&W Switching Monitor with Remote Control

NEW

This 4 channel surveillance monitor has both RCA and mini-DIN input connectors and will accept a mixture of Plug 'N View and ordinary cameras. The monitor sequentially displays each camera picture and automatically skips inactive channels. Video and audio output is through RCA sockets (i.e. not Plug 'N View mini DIN plug). A full function remote control is also included.

- 12" B&W CRT
- Adjustable camera switching time
- Dimensions: 300(W) x 310(D) x 290mm(H)

PLUG N VIEW

Cat. QH-3406 $299.50

B&W CCD Dome Camera

NEW

This quality 'Plug 'N View' dome camera is mounted inside a darkened dome making it ideal for security application where a visible deterrent is helpful. The camera is suitable for use with any of our 'Plug 'N View' monitors/switchers and needs no addition power supplies or cables.

- 380 TV Lines Resolution

PLUG N VIEW

Cat. QC-3716 $79.95

4 Channel Video Switcher with Audio

This four channel camera switcher will accept up to four Plug 'N View surveillance cameras. It has a number of advanced features including variable switching time, auto or manual operation and built-in camera power output (for Plug 'N View cameras). The switching time can be varied from 1 to 30 seconds using the front panel thumb wheel.

NEW

Specifications:

- Suits our indoor, outdoor and indoor dome Plug 'N View cameras on this page.
- Audio and video outputs are RCA type.
- 1.8m A/V output cable included
- 12VDC operation (mains plugpack supplied)

PLUG N VIEW

Cat. QC-3740 $79.95

12" B&W 4 Channel Quad Monitor with Digital Control

NEW

This monitor accepts up to 4 Plug 'N View or standard video cameras and operates in switching or quad display modes. Each camera can be assigned a title which displays on the screen eg. stairs, foyer etc. The monitor has a number of advanced features including freeze frame, image zoom and picture in picture capability. The on-screen display enables all major monitor and processor settings to be adjusted from the front panel controls.

- 12" B&W CRT
- On-screen alarm history display
- Adjustable camera switching time
- Dimensions: 300(W) x 310(D) x 290(H)mm

PLUG N VIEW

Cat. QH-3407 $599.50

Jaycar ELECTRONICS

Freecall For Orders 1800 022 888

www.jaycar.com.au

PLUG N VIEW PIR INTEGRATED SYSTEMS

This system takes the Plug 'N View concept one step further. It has a number of advanced features and can form the heart of a truly sophisticated surveillance setup. This will ensure you are monitoring & recording the most relevant events and not viewing irrelevant cameras. See individual products below for details on this excellent system.

PACKAGE DEALS ARE AVAILABLE ON THESE PRODUCTS. PLEASE ENQUIRE.

B&W CCD Indoor Camera with IR Illumination, Audio and PIR Function

When the PIR is triggered, the camera's companion controller (QC-3700) will automatically send the camera's picture and sound to the controller's output. The camera is housed in a plastic case with an adjustable wall bracket. It is fitted with a 2 metre signal/control cable and includes an 18m extension. Requires the QC-3700 to operate as a PIR camera.

- 380 TV Lines
- 6m PIR detection Range

NEW

PLUG N VIEW Cat. QC-3702 $149.95

B&W CCD Outdoor Camera in Metal Case with IR Illumination and PIR Function

Similar in function to QC-3702 (left), it is ideal for monitoring a driveway, pool, backyard, warehouse, goods dispatch area etc. The camera is housed in a rugged metal case with an adjustable wall bracket. It is fitted with a 2 metre signal/ control cable and an 18m extension is included. Requires the QC-3700 to operate as a PIR camera.

- 380 TV Lines
- 6m PIR detection Range

NEW

PLUG N VIEW Cat. QC-3704 $169.95

4 Channel Video Switcher with PIR Function and Audio

NEW

Accepts up to four Plug 'N View surveillance cameras. It can accommodate cameras with or without PIR's and can be operated in several modes. Basic operation is manual selection of individual cameras. Automatic operation will sequentially switch between cameras. When a PIR camera senses movement, the camera's picture and sound (if fitted) is sent straight to the unit's output and will override the sequential switching sequence. Should a second (or even 3rd) PIR camera detect movement, the triggered images will be displayed sequentially at 2 second intervals. The normal switching sequence will resume 15 seconds after movement is no longer detected •Manual or automatic operation

- Audio and video outputs are RCA type.
- 1.8m A/V output cable included

Cat. QC-3700 $129.00

20M Extension Cable to suit Plug 'N View Cameras

NEW

Suits all cameras in the Plug 'N View range. 6pin mini DIN plug to socket.

Cat. QC-3457 $19.95

2003 CD ROM Catalogue OUT NOW. Over 5,500 products & 3,315 pages of data. Only $2.50.

DIGITAL VIDEO RECORDER BARGAINS

Single Channel DVR with Stereo Sound & Hard Disk Drive

NEW

This full featured Digital Video Recorder offers simple front panel controls, NTSC or PAL operation, and RS-232 remote control. It is supplied with rack mounting brackets, and a 120GB hard disk drive. It can store over 2000 hours of video (at 1fps) on the supplied drive.

Also available without hard disk drive. Cat. QV-3065, $899. See 2003 cat. for details.

Cat. QV-3066 $1,099

Digital Video Recorder with 4 Channel Real-Time Display

The QC-3052 uses it's own 20GB Hard Disk Drive and in-built software. Although it doesn't require a PC, an RS-232 port is provided for transferring images to a PC for further review, printing, transmitting and editing. NTSC and PAL video outputs are provided to locally monitor video signals. We have made available on our website, the entire list of functions available to the QV-3052. Limited quantity.

2002 Cat Price $3,495

Almost 1/2 Price

Cat. QV-3052 $1,795

4 Channel Digital Surveillance Video Recorder DVR

This Professional quality recorder features a 40GB removable hard drive, external triggering, NTSC or PAL capability and password protected settings. The removable hard drive is compatible with our Cat. XC-4670 removable carrier, so the drive can be installed into a PC for further viewing and editing with the software provided. •Switching or four-way split display.

- 352 x 288 Resolution. •Compatible with any IDE Hard Disk up to 200GB.
- Dimensions: 420(W) x 87.9(H) x 318(D). See cat page 205 for details.

Limited quantity.

Was $1,995

Save $500

Cat. QV-3060 $1,495

TRANSFORM YOUR GARDEN IN TIME FOR SUMMER

DIE-CAST & POWDER COATED

Wall Mount Step Light
Will mount on a wall so it's great for step or path lighting. Points down so no glare. Suits JC pin globe.

Cat. SL-2778 $16.75

Flushmount Illumination
Designed to be embedded into a path or walkway. Can be walked on. Suits MR16 globe.

Cat. SL-2776 $22.50

Pathway Illuminator
Stylish design for pathways. Used at regular intervals, the effect is spectacular. Suits MR16 globe.

Cat. SL-2780 $22.50

Pagoda
Light up the path as well as the surrounding garden. Suits JC pin globe.

Cat. SL-2784 $28

Garden Flood Light
Includes spike for pushing into the ground. Length 310mm incl spike. Suits MR16 globe.

Cat. SL-2770 $22.50

Focal Spotlight / Highlighter
Feature a palm or shrub with a narrow-beam halogen. Spike and hood included. Length 320mm approx. Suits MR16 globe.

Cat. SL-2772 $22.50

Globes not supplied
Available separately.

General Purpose Spotlight / Highlighter
Bracket mounting for fences or tree trunks. Spike incl for ground mounting. Suits MR16 globe.

Cat. SL-2774 $22.50

SAVE ON GARDEN LIGHTING TRANSFORMERS

See our 2003 catalogue for our complete range of indoor/outdoor transformers.

240VAC to 12VAC 105W Indoor
Will power 2 x 50W halogens or 5 x 20W. Ideal for pathway lights
Was $39.95
Save $10

Cat. MP-3043 $29.95

240VAC to 24VAC 150W Indoor
Delivers enough to run
3 x 50W or
5 x 20W and
1 x 50W or
7 x 20W. 24V is more suited to long cable runs.
Was $49.95
Save $10

Cat. MP-3045 $39.95

240VAC to 12VAC 150W Outdoor
Dust and waterproof; suitable for mounting outside away from direct rain.
Was $69.95
Save $10

Cat. MP-3048 $59.95

240VAC to 24VAC 150W Outdoor
Dust and waterproof; suitable for mounting outside away from direct rain.
Was $69.95
Save $10

Cat. MP-3049 $59.95

New High Quality Stainless Steel Pool and Garden Lighting

Professionals will love these as much as DIY enthusiasts. They are extremely high quality underwater and garden lights made from 316 grade stainless steel. These will not only make your garden or pool area look beautiful, but they will last and last. The two garden pagodas have frosted glass shrouds with stainless steel guards, and an IP44 rating making them hardy while producing a stunning lighting effect. The underwater lamps are of high quality watertight construction and have an IP68 rating. With the use of different models in and around your pool and garden, you can create wonderful illumination effects. See our lighting transformers above, suited for running these units. They are supplied with a 12V 50W JC pin or MR16 halogen globe. See 2003 Catalogue for full details.

Pagoda Lamp
The lantern section of this light is circled with Stainless Steel fins to diffuse the light downwards. Stands 390mm high with spike driven into the ground.

Cat. SL-2702 $34.95

Tall Pagoda Lamp
This lamp has a tall diffuser section for maximum light. Stands 470mm high with spike driven into the ground.

Cat. SL-2700 $39.95

Spike Mount Adjustable Waterproof Spotlight
Great when used to accentuate a particular part of your garden, a landscaped area, or water feature etc. It has a 150mm a lead for power connection.

Cat. SL-2708 $69.95

Flush Mount Waterproof Light
This light is designed to be mounted into walls around a pool, water features, and create a stunning effect. It has a 150mm lead for power connection.

Cat. SL-2704 $79.95

Flush Mount Waterproof Light with Cover
Similar in design to SL-2704, with the addition of a hood cover. Great for stairway illumination or highlighting a waterfall feature etc.

Cat. SL-2706 $89.95

Surface Mount Adjustable Angle Waterproof Spotlight
Featuring a surface mount base, the light can be positioned to almost any desired direction. It has a 150mm lead for power connection.

Cat. SL-2710 $79.95

Surface Mount Fixed Angle Waterproof Spotlight
The lamp is fixed at a 90° angle, causing the light to shine parallel with the surface. Ideal for mounting on the wall of a pond, or to highlight any landscaped area.

Cat. SL-2712 $79.95

Jaycar ELECTRONICS

Freecall For Orders 1800 022 888

www.jaycar.com.au

GREAT SAVINGS ON 12V LIGHTING

12V Cold Cathode Fluorescent Lighting (CCFL) Pre-wired Kits

These flickerless fluorescents are encased in a clear tube with mounting brackets at each end. The inverter is pre-wired with a cigarette lighter plug on the end. The total length of the tubes is slightly longer than 100 and 300mm including the brackets.

100mm Tubes

White	Cat. SL-2870
Red	Cat. SL-2871
Blue	Cat. SL-2872
Green	Cat. SL-2873
UV	Cat. SL-2874

Was $27.95, Save $8

ALL 100MM **$19.95 ea**

300mm Tubes

White	Cat. SL-2890
Red	Cat. SL-2891
Blue	Cat. SL-2892
Green	Cat. SL-2893
UV	Cat. SL-2894

Was $39.95, Save $12

ALL 300MM **$27.95 ea**

SOLD PREWIRED TO SAVE TIME

Ultra Bright 12VDC Fluorescent Lamps

11 Watt 12VDC PL Cabin Lamp

This fluorescent lamp uses a single 11 Watt PL tube and has a 3 Watt night light as a courtesy lamp.Designed to be surface mounted.

Spare tube to suit - cat. ST-3007 $14.95
Was $39.95 Save $10

Cat. ST-3006 **Now $29.95**

12V DC 16 Watt 2D PLRound Ceiling Light

This unit uses a compact fluoro tube rated at 16 Watts, roughly equal to a standard 80 Watt globe. It would be ideal to mount over a table, as it has wide light dispersion.

Was $49.95 Save $10

Cat. ST-3009 **Now $39.95**

12V DC 16 Watt 2D PL Square Light

Similar in design to ST-3009 above, though it features a square body.

Spare tube to suit ST-3009 & ST-3012 - ST-3013 $19.50
Was $47.95 Save $10

Cat. ST-3012 **Now $37.95**

12V Cold Cathode Fluorescent Lighting (CCFL) Bare Tubes

These bare fluorescent tubes produce an incredible amount of light. They have a diameter of only 4mm, so they will fit just about anywhere. Each tube is powered by a small inverter, and the inverter requires 12V at up to 380mA or current. Each tube requires one inverter.

100mm Tubes

White	Cat. SL-2860
Red	Cat. SL-2861
Blue	Cat. SL-2862
Green	Cat. SL-2864
UV	Cat. SL-2865

ALL 100MM **$11.95 ea**

JULY ONLY
Get the inverter FREE with every Tube purchased!
Cat. SL-2868
Worth $9.95!

Cat. SL-2868 Inverter to suit 100mm CCFL

300mm Tubes

White	SL-2880
Red	SL-2881
Blue	SL-2882
Green	SL-2884
UV	SL-2885

ALL 300MM **$19.95 ea**

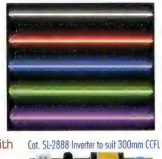

JULY ONLY
Get the inverter FREE with every Tube purchased!
Cat. SL-2888
Worth $12.95!

Cat. SL-2888 Inverter to suit 300mm CCFL

12" Colour Neon Tubes

Create great lighting effects in your car, boat or home! They can be mounted to any dry, flat surface. Requires 12-14VDC @ 250mA. Pre-wired to a 1.5m lead and cigarette lighter plug.

Red	Cat. ST-3142
Blue	Cat. ST-3143
Green	Cat. ST-3144

Was $24.95

Save $10

ALL COLOURS **$14.95 ea**

12" Blacklight UV Neon Tube

Just like a blacklight in nightclubs, it gives a 'glow in the dark' effect. Pre-wired to a 1.5m lead and cigarette lighter plug. Requires 12-14VDC @ 250mA.

Was $24.95

Cat. ST-3147 **$14.95 ea** **Save $10**

12" Lightning Blue Neon Tube

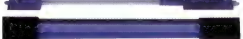

Creates a twisting flow on twisting light that spirals along the tube. Pre-wired to a 1.5m lead and cigarette lighter plug. Requires 12-14VDC @ 420mA.

Was $29.95

Cat. ST-3148 **$19.95 ea** **Save $10**

Electroluminescent (EL) Wirelight

This amazing wire light glows when power is applied. It will add a new dimension to interior lighting in your car, or create great effects around your stereo or computer. The uses are endless! Pre-wired with a 1.2m lead (including inverter) and 1m EL wire. Requires 12VDC @ 67mA.

White	Cat. SL-2835	Red	Cat. SL-2836
Blue	Cat. SL-2837	Green	Cat. SL-2838
Orange	Cat. SL-2839		

Was $44.95

Save $10

ALL COLOURS **$34.95 ea**

Freecall For Orders 1800 022 888
www.jaycar.com.au
Jaycar ELECTRONICS
OVER 3,500 PRODUCTS IN STORE JAYCAR ELECTRONICS

Handheld Trackball Mouse

Off-table track mouse which you operate easily and comfortably with your thumb.
•Ideal for laptops owners who don't have room to operate a bulky desktop mouse.
•Avoid harm to your wrist or muscles
•3 Button, PS/2 Connection
•Compatible with Windows 95/98/2000/ME/XP/NT

Suits Windows 95/98/2000 Me/XP/NT

NEW

Cat. XH-5130 $29.95

60 CD Drawer Case

Store your CD collection in one easy to manage unit. It holds 60 CD's and is made from a transparent blue to enhance the look of your computer workspace. With a small push on the front of the drawer, it automatically slides open.
•Measures: 290(L) x 140(W) x 150(H)mm.

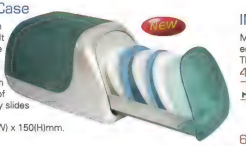

NEW

Cat. AR-1495 $24.95

Infrared Door Security Beam with Reflector

This compact entry warning system is designed for use in shops, restaurants, and surgeries etc. It transmits an invisible beam of Infrared light across the entryway onto a prismatic reflector mounted on the opposite side. When a person or vehicle goes past the beam, the circuit is interrupted and the alarm sounds.
•Effective Range: 2-8metres
•Mains plugpack supplied

NEW

Range 2-8 Metres

Cat. LA-5195 $119.00

4 Way Optical Switch Box

With the digital age evolving rapidly, more Home Theatre and Hi-Fi systems are utilising the superior sound reproduction of Digital Audio. As a result, you may find yourself with more than one optical output, but only one receiver. This unit will switch between 4 inputs (3 x toslink and 1x3.5mm), to 1 toslink output. A 1m toslink cable is included.

NEW

Cat. AC-1675 $34.95

2 Port Auto KVM Switch

This Automatic KVM switch allows the user to connect 2 PC's to the one monitor, keyboard and mouse. Features pre-wired cables to connect between the switch and the computers.

NEW

Cat. YN-8095 $99.00

USB 2.0 10/100 Ethernet Network Adaptor

A great alternative to PCI or PCMCIA network adaptors. Ideal for notebook computers or any computer on the go.
•USB 1.0, 1.1 & 2.0 compliant
•IEEE 802.3u 10/100 Base-T, TX & T4 compatible
•Software / Drivers Included
•Size: 50 x 67 x 26
•Windows 98SE, ME, 2000 or XP compatible.

NEW

Suits Windows 98SE/ME 2000/XP

Cat. YN-8065 $79.95

IMAC Type Blue Powerboards

NEW

Made from a transparent blue plastic, it will match your modern equipment or give a great new look to your boring power cabling. They have built in overload protection with reset switch.

4 Way

Cat. MS-4041 $5.95

6 Way

Cat. MS-4046 $8.25

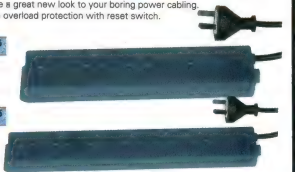

Personal Breath Analyser

Unlike many other personal alcohol detectors, this pocket sized instrument is both accurate and easy to use. Designed to fit comfortably in your pocket or purse, the unit will detect blood alcohol levels as low as 0.01% and remind you of the need for responsible drinking. The tester will also respond to high levels of Carbon Dioxide and Liquid Petroleum Gas (LPG).
•While offering a good indication of blood alcohol levels, the QM-7292 should not be relied upon. Nothing should take place of responsible alcohol consumption, and you should never drink and drive.

NEW

Cat. QM-7292 $59.95

Traffic Lights Style Parking Sensor

This unit is your own personal set of traffic lights that tell you when to stop so you are perfectly positioned in the garage. The green light illuminates at about 1m- 'Keep driving', the yellow light at about 700mm- 'Get ready to stop', and the red light about 400mm- 'Park it now!!'
•Ideal for 4WD, Vans, large cars etc.
•Requires 4 'AA' Cells. Use Cat: SB-2425

NEW

Cat. LR-8867 $49.95

Dual Under Cabinet Light

This compact unit two adjustable Krypton globes. Runs on 4 x 'AA' batteries, making it versatile and portable, and also accepts a plugpack for permanent installations.

NEW

Cat. ST-3190 $14.95

Electronic Whistle

An extremely loud whistle at the touch of a button.
• Great for sports or personal safety.
• Includes batteries (LR44).

NEW

Cat. YS-2812 $19.95

OVER 5,500 PRODUCTS IN-STORE

Jaycar ELECTRONICS

Freecall For Orders 1800 022 888

www.jaycar.com.au

Hand Made Heavy Duty Current Shunts

NEW

At long last, we have found a supplier of quality, hand made current shunts. They are designed to work across a Digital Panel Meter on their 0-200mV range, i.e. the most common type.
See Cat Pg 244 for full details and specs.

1-5A	Cat. QP-5410	$9.95
6-50A	Cat. QP-5412	$9.95
51-100A	Cat. QP-5414	$19.95
101-200A	Cat. QP-5416	$34.95

Water Displacement (WD) Lube

Specially formulated for use with electronic and mechanical assemblies.

It's not WD40® but we think it's just as good!

175G CAN — Cat. NA-1025 — $2.95

5 in 1 Folding Multi-Tool with Torch

A handy little unit that includes 5 tools, and an ultra bright LED torch. It has pliers with wire cutter, a saw, a bottle opener, a knife, a Phillips and slotted screwdriver. All neatly packaged in an anodised blue frame.
•Measures 70(L) x 30(W) x 17(D)mm.

NEW

Cat. TH-1906 — $14.95

1000 Watt (2000W Surge) Electrically Isolated 12VDC to 230VAC Pure Sine Wave Inverter

This inverter is from the same manufacturer as our 150, 300 and 500W sinewaves, so you are assured it works well. It is electrically isolated between the battery and secondary voltage, and can be permanently mounted. The rear panel houses the cooling fan and 12V input terminals, which will accept 2 gauge cable (10mm Dia).

NEW

Cat. MI-5088 — $899

Stainless Steel Screwdrivers

In the past, stainless steel tools have been poisonously expensive. We are proud to introduce a range of quality #316 Marine Grade (3CR13) Stainless Screwdrivers at a price that won't break the bank.

Slotted

Tip Width	Blade Length		
3.0	75mm	Cat. TD-2340	$3.95
4.0	100mm	Cat. TD-2342	$4.50
5.0	125mm	Cat. TD-2344	$4.95

NEW

Phillips

Tip Size	Blade Length		
1	80mm	Cat. TD-2350	$3.95
2	100mm	Cat. TD-2352	$4.95

NEW

Digital Non-Contact Thermometer with Laser Sighting - Improved Model

Measuring the surface temperature of an object was only generally possible by attaching a suitable sensor to it. There is now a quick and easy way to do all of the above - just point, pull the trigger, and read the display! Features include a large, green backlit LCD readout, data hold & auto power off, C/F degrees switchable and a comfortable, lightweight, design.

•Temperature range: -50 to +500°C
-58 to +932°F

NEW

New larger temperature range

Cat. QM-7222 — $159.50

BUY THIS: DURATECH

Temperature Controlled Soldering Station

•Adjustable Temperature
•Lightweight Soldering Pencil
•Excellent Heat Recovery

Cat. TS-1380 — $179

GET THESE FREE:

Deluxe Tip Cleaner Cat. TS-1510	Worth $12.95
1Kg Roll of 0.71mm Solder Cat. NS-3002	Worth $28.95
A goot Desolder Braid Cat. NS-3027	Worth $4.95

That's $46.85 Value Absolutely FREE!

New Lower Prices on 300VA Toroidals

WAS $83.95ea Save $14ea

12V	Cat. MT-2130	$69.95
18V	Cat. MT-2132	$69.95
40V	Cat. MT-2140	$69.95
50V	Cat. MT-2144	$69.95

NEW LOWER PRICES, HERE TO STAY

OVER 5,500 PRODUCTS IN STORE

Jaycar ELECTRONICS

Freecall For Orders 1800 022 888

www.jaycar.com.au

Jaycar ELECTRONICS

Digital Reaction Timer Kit

Ref: Silicon Chip June 2003
Test your reaction time with this tester, and a digital multimeter. It converts the time it takes you to push the buttons to a voltage, read by any digital multimeter. Great fun testing against your friends, or trying to beat your own times. Kit supplied with PCB and all electronic components.

NEW KIT

Cat. KC-5360 $29.95

Auto Power-Up Kit

Ref: Silicon Chip July 2003
If you own a home theatre system, workshop, personal computer or any group of appliances which work together, then you need one of these. The powerup unit will automatically switch on your peripheral devices and associated equipment, as soon as you switch on the 'master' device. Kit supplied with PCB, silk-screened front panel, and all electronic components.

NEW KIT

Cat. KC-5363 $79.95

Programmable Continuity Tester Kit

Ref: Silicon Chip July 2003
While most modern digital multimeters feature a continuity tester, it is only a very rough indication of the continuity. This unit will test for continuity from 1-100 ohms, giving a much more accurate reading. It is accurate, reliable and works well. Kit supplied with PCB, silk-screened panel, and all electronic components.

NEW KIT

Cat. KC-5362 $39.95

'Smart' Slave Flash Trigger Kit for Cameras

Ref: Silicon Chip July 2003
The internal flash on a many digital and film cameras works well for 'happy snaps', but can present issues when shooting portraits, or any subject requiring even lighting. This unit will trigger a separate flash system, and even works with multiple flash – red eye reduction systems used in many modern cameras. Kit supplied with PCB, silk-screened front panel, and all specified electronic components. Flash trigger lead not supplied.

NEW KIT

Cat. KC-5364 $29.95

LOOKING FOR AN OLD KIT?

If you are, we may have it in our Kit Back Catalogue. The 'Kit Back Catalogue' range is listed on the Jaycar website (under Kits & Projects) and can only be purchased via the website "www.jaycar.com.au" or Techstore (i.e. not the Jaycar stores).

YOUR LOCAL JAYCAR STORE

NEW SOUTH WALES	
Bankstown	•Ph (02) 9709 2822
Bondi Junction	•Ph (02) 9369 3899
Brookvale	•Ph (02) 9905 4130
Campbelltown	•Ph (02) 4620 7155
Erina	•Ph (02) 4365 3433
Newcastle	•Ph (02) 4965 3799
Parramatta	•Ph (02) 9683 3377
Penrith	•Ph (02) 4721 8337
Silverwater	•Ph (02) 9741 8557
St. Leonards	•Ph (02) 9439 4799
Sydney City	•Ph (02) 9267 1614
Wollongong	•Ph (02) 4226 7089
VICTORIA	
Coburg	•Ph (03) 9384 1811
Frankston	•Ph (03) 9781 4100
Geelong	•Ph (03) 5221 5800
Melbourne	•Ph (03) 9663 2030
Ringwood	•Ph (03) 9870 9053
Springvale	•Ph (03) 9547 1022
QUEENSLAND	
Aspley	•Ph (07) 3863 0099
Brisbane - Woolloongabba	•Ph (07) 3393 0777
Gold Coast - Mermaid Beach	•Ph (07) 5526 6722
Townsville	•Ph (07) 4772 5022
AUSTRALIAN CAPITAL TERRITORY	
Canberra	•Ph (02) 6239 1801
TASMANIA	
Hobart	•Ph (03) 6231 5877
SOUTH AUSTRALIA	
Adelaide	•Ph (08) 8231 7355
WESTERN AUSTRALIA	
Perth	•Ph (08) 9328 8252
NEW ZEALAND	
Newmarket - Auckland	•Ph (09) 377 6421
Glenfield - Auckland	•Ph (09) 444 4628
Wellington	•Ph (04) 801 9005
Christchurch	•Ph (03) 379 1662
Freecall Orders	•Ph 0800 452 9227

Sunset Switch - Upgraded version of Silicon Chip Design

Ref: Silicon Chip June 2003
Switches on mains power at a preset darkness level. We have upgrade this kit from the original Silicon Chip design to switch 240V/10A from the original 240V/6A design. Kit supplied with PCB, electronic components, silkscreened front panel.

BETTER THAN THE ORIGINAL DESIGN

NEW KIT

Cat. KC-5359 $79.95

12V LED Lighting for your Car!

These kits can replace the stop/tail, centre high mount stop light, wedge lamp, and festoon (interior) lamps. This gives you great freedom to choose whatever colour/intensity LED's you wish. All projects are designed for 12VDC applications. **All kits are supplied with the PCB(s) and instructions ONLY.**

PC Board for 31mm Festoon Style (Interior Light) Kit

Ref: Silicon Chip March 2003
•Replaces 12V filament lamps with 2 LED's.
•Great for upgrading your interior light or introducing extra highlights inside the car.

NEW KIT Cat. KC-5354 $4.95

Use any broken globes for fittings.

PC Board for Centre High Mount Stop Light (CHMSL) Kit

Ref: Silicon Chip March 2003
•Replace an existing 12V CHMSL with 16 LED's.
•Add a CHMSL to your vehicle or trailer.

NEW KIT Cat. KC-5356 $8.95

PC Board for LED Bayonet Style Lamp Kit

Ref: Silicon Chip March 2003
•Replaces 12V filament lamps with 12 LED's.
•12 LED design.

Cat. KC-5349 $8.95

PC Board for 41mm Festoon Style (Interior Light) Kit

Ref: Silicon Chip March 2003
•Replaces 12V filament lamps with 3 LED's.
•Great for upgrading your interior light or introducing extra highlights inside the car.

NEW KIT Cat. KC-5355 $4.95

LED's & fittings not supplied

PC Board for Wedge Lamp Kit

Ref: Silicon Chip March 2003
•Replaces 12V filament lamps which use the 'Wedge' style lamps with 9 LED's.

NEW KIT Cat. KC-5357 $8.95

PRODUCT SHOWCASE

Save 33% on DSE 400VA UPS in July

For the month of July, Dick Smith Electronics have a great offer on their new 400VA Uninterruptible Power Supply; at $88.84 it is one third off the normal retail price of $184.00.

If your data or work is important to you, then you will know just how valuable a UPS can be. At 400VA, this one is designed to give you enough time to back up or save your work in case of power failure.

When it detects a power failure, it automatically switches over (typically within 3ms) to provide power to the system.

It gives you one minute at full load (400VA) or up to six minutes at half load – which should be plenty of time.

The other big advantage of running a UPS with your computer system is that it helps protect against power line surges and spikes.

The UPS has an internal (replaceable) SLA battery which is kept trickle charged while ever the device is turned on. Recharge time is 8 hours after complete discharge.

The M7650 UPS can also be used with DSE's "Commander Pro" software for scheduling system shutdowns, providing email warnings and much more. This is a free download (13MB) from the DSE or Tandy website.

It is available from all Dick Smith Electronics and Tandy stores, DSE PowerHouse stores or from the company's online store.

Contact:
Dick Smith Electronics Pty Ltd
2 Davidson St Chullora NSW 2190
Tel: (02) 9642 9100 **Fax:** (02) 9642 9111
website: dse.com.au

New Satellite Book, Catalog from Av-Comm

Garry Cratt, well known to SILICON CHIP readers for his satellite TV articles, has put it all together in a new (3rd) edition of his popular "Practical Guide to Satellite TV".

With up-to-the-minute information on this very popular and growing activity (and business for many), the book has been expanded to 150 pages.

It tells you what makes up a satellite TV system, how to put it all together and, most important of all, where you'll find signals.

It has a recommended retail price of $39.00 + GST and is available from Av-Comm Pty Ltd.

And speaking of Av-Comm, they now have available their 2003 catalog.

It's somewhat smaller than previous issues (A5 in size) but still contains 38 pages of all the good gear you'll need for your own Satellite TV Installation.

Contact:
Av-Comm Pty Ltd
PO Box 225, Brookvale NSW 2100
Tel: (02) 9939 4377 **Fax:** (02) 9939 4376
website: avcomm.com.au

Mambo 5-in-1 Multimedia Storage Device

EFx Systems, the Australian distributors for Mambo Digital, have released the Mambo X P353SD 5-in-1 multifunction digital device which can be used as a Digital Photo Image Bank/Picture Album, a Digital Audio Player, an MP3 Encoder/Recorder, an MP3 Digital Voice Recorder and an active USB Portable External Hard Drive.

It has 20GB or 30GB storage capacity, SD/MMC (Secure Digital/Multimedia Card) memory slot and a fast USB 2.0 interface

The unit integrates Mambo Digital's EZ-Navigator user interface and Navi-Dial scroller with a 128 x 64 pixel LCD.

The 20GB model ($749 rrp) can store up to 9000 songs of CD quality or 700 hours of MP3 recording – but EFx state that the 130 x 98 x 27mm unit is not just capable of storing MP3, WMA or JPG files; it is capable of storing files from just about any application, in any format.

Contact:
EFx Systems
PO Box 1288, Burwood NSW 1805
Tel: (02) 9742 1900 **Fax:** (02) 9742 1928
website: efx.com.au

TOROIDAL POWER TRANSFORMERS

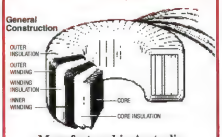

Manufactured in Australia
Comprehensive data available

Harbuch Electronics Pty Ltd
9/40 Leighton Pl. HORNSBY 2077
Ph (02) 9476-5854 Fx (02) 9476-3231

SILICON CHIP

www.siliconchip.com.au

Order Form/Tax Invoice

Silicon Chip Publications Pty Ltd
ABN 49 003 205 490

YOUR DETAILS

Your Name_____
(PLEASE PRINT)

Organisation (if applicable)_____

Address_____

_____

Postcode_____ **Daytime Phone No. (** **)**_____

Email address (if applicable)_____

Method of Payment:

❑ Cheque/Money Order ❑ Bankcard ❑ Visa Card ❑ Master Card

Card No. ❑❑❑❑ ❑❑❑❑ ❑❑❑❑ ❑❑❑❑

Card expiry date ❑❑/❑❑

Signature_____

PRICE GUIDE: SUBSCRIPTIONS

(Note: all subscription prices include P&P). (Aust. prices include GST)

Please state month to start.

Australia: 1 yr	$A69.50	2 yrs	$A135
1 yr + binder	$A83	2 yrs + 2 binders	$A159
NZ (air): 1 yr	$A77	2 yrs	$A145
Overseas (air): 1 yr	$A125	2 yrs	$A250

PRICE GUIDE: OTHER PRODUCTS

(all prices include GST on Aust. orders)

***SILICON CHIP BACK ISSUES in stock:** 10% discount for 10 or more issues or photocopies. Australia: $A6.80 ea (including p&p). Overseas: $A10 each (including p&p by air).

***ELECTRONICS AUSTRALIA:** project photocopies, limited back issues. 10% discount for 10 or more issues or photocopies. Australia: $A6.80 each (including p&p). Overseas: $A10 ea (including p&p by air).

***BINDERS:** BUY 5 or more and get them postage free. (Available in Aust. only): $A12.95 each plus $5.50 p&p each.

***ELECTRONICS TESTBENCH (limited stock):** Aust. $A13.20; NZ/Asia/Pacific $A15.95 including p&p (air); elsewhere $18.95. (All prices include p&p).

***BOOKSHOP TITLES:** Please refer to current issue of SILICON CHIP for currently available titles and prices as these may vary from month to month.

SUBSCRIBERS QUALIFY FOR 10% DISCOUNT ON ALL *SILICON CHIP* PRODUCTS*

* except subscriptions/renewals

Qty	Item Description	Item Price	P&P if extra	Total Price
Total			$A	

BEAT THE PRICE RISE! SUBSCRIPTION PRICE INCREASES SHORTLY

TO PLACE YOUR ORDER

Phone (02) 9979 5644
9am-5pm Mon-Fri
Please have your credit card details ready

OR

Fax this form to (02) 9979 6503
with your credit card details
24 hours 7 days a week

OR

Mail this form, with your cheque/money order, to:
Silicon Chip Publications Pty Ltd,
PO Box 139, Collaroy, NSW,
Australia 2097

Recycle your normal "throwaway" batteries

Many people don't realise it but it is possible to recharge Alkaline batteries – often up to 15 times.

So now, with this Universal 5-in-1 Battery Charger from Farnell, you can save money and get more life out of your batteries instead of consigning them to landfill!

The recharger handles most batteries sizes – AAAA, AAA, AA, C, D, 6V and 9V, and not just in alkaline: it will also recharge alkaline manganese (RAM), Titanium, NiCad and NiMH cells. It is fully automatic – there are no switches or buttons to press – and a range of different sized batteries can be recharged at the same time.

The charger is designed, engineered and made in Australia.

Contact:
FarnellInOne
Tel: 1300 361 005 (NZ 0800 90 80 80)
website: farnellinone.com.au

UK Low Cost Anti-Collision and Reversing Radar

A new vehicle radar system from the UK is has the potential to make sophisticated reversing and anti-collision safety aids an affordable accessory for the mass market.

The CCL-Softcar radar safety system for vehicles uses lower frequency – and lower cost – components than alternative radar reversing and anti-collision technology. The radar's field of view is also completely programmable, allowing a system to dynamically and intelligently adapt as the vehicle's steering wheels change direction.

Contact:
Cambridge Consultants Ltd
Tel: 0011 44 1223 420024
website: cambridgeconsultants.com

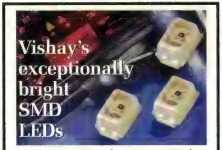

Devices in the new Vishay TLMx2100 and TLMx2300 Mini-LED families are available in all typical wavelengths from 465nm to 630nm, providing exceptionally bright illumination at 10mA and 20mA, respectively. TLMx2100 color options include super red (7.5mcd), orange (7.5mcd), yellow (7.5mcd), green (10.0mcd), pure green (2.2mcd), and blue (7.0mcd).

For applications requiring maximum intensity, TLMx2300 devices built on AlIn-GaP on GaAs technology are offered in ultra-bright red (80mcd), orange (120mcd), and yellow (120mcd) versions.

Contact:
Vishay Intertechnology Asia Pte Ltd
Tel: 0011 65 6780 7812
website: vishay.com

SAVE UP TO 60%
Futurlec

Kits
New Car Battery Monitor kit featuring voltage indication and warning alarm, helps prevent flat batteries.
Also available CAN Node Kit, Solar Regulator, our popular Touch Switch Kit and heaps more. Visit our web site for more details.

Development Boards
PIC16F877 Development Board with in-circuit serial programming. Supports RTC, LCD, EEPROM, RS232/RS485 Communication. Great for learning about PIC microcontrollers and developing applications.
Great value at $42.95
ATMega Development Board featuring the ATMega163 microcontroller. Includes in-circuit program download, RS232 communication, test and program LEDs, easy to connect header pins for port connections, only $52.90

Microchip Microcontrollers
New Microchip Microcontrollers in stock now
PIC12F675 - $2.60
PIC16F628 - $4.95
PIC16F877 - $12.20
PIC18F458 - $15.20

Huge Range of IC's
Best prices on a wide range of IC's. We stock Maxim, Analog Devices, Dallas and most EPROM's.
24LC256 - $4.50
DS1307 - $5.30
MAX232 - $2.30
29F040 - $6.90
7805T - $0.55
62256 - $3.85
LCD16x2- $12.20

New Atmel Microcontrollers Available
ATTiny12 - $3.90
AT90S2313 - $5.25
AT90S8535 - $12.20
ATMega16 - $9.00
Atmel Programmers and control boards also available, starting from $30

Controller
Wide range of control boards to suit embedded applications
P89C51 Control Board - Only $46

www.futurlec.com
Note: Prices shown on website are in US Dollars. Prices shown here are in Australian Dollars based on an exchange rate of 0.65

CIRCUIT NOTEBOOK

Interesting circuit ideas which we have checked but not built and tested. Contributions from readers are welcome and will be paid for at standard rates.

Infrared remote receiver has four outputs

This circuit enables any infrared (IR) remote control to control the outputs of a 4017 decade counter.

It's quite simple really and uses a 3-terminal IR receiver (IRD1) to pick up infrared signals from the transmitter. IRD1's output is then coupled to NPN transistor Q1 via a 220nF capacitor.

Transistor Q1 functions as a common-emitter amplifier with a gain of about 20, as set by the ratio of its 10kΩ collector resistor to its 470Ω emitter resistor. Q1 in turn triggers IC1, a 4047 monostable which in turn clocks a 4017 decade counter (IC2).

Basically, IC1 provides a clock pulse to IC2 each time a remote control button is pressed. If you don't wish to use all 10 outputs from IC2, simply connect the first unused output to pin 15 (MR).

In this case, only the first four outputs (O0-O3) of the counter are used and so the O4 output is connected to pin 15 to reset the counter on the fifth button press.

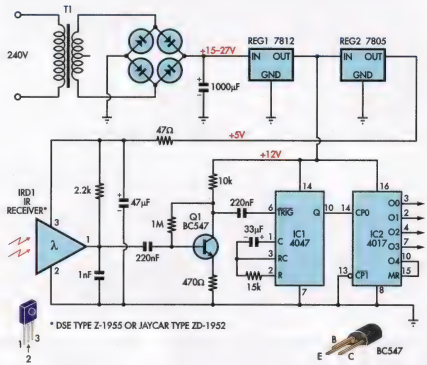

Power for the circuit is derived from the mains via a transformer and bridge rectifier which produces about 15-27V DC. This is then fed to 3-terminal regulators REG1 & REG2 to derive +12V and +5V supply rails.

Fred Edwards,
Ardross, WA. ($35)

Wide-range inductance meter

Looking for a wide-range inductance meter? This circuit can measure inductors ranging in value from a few microhenries (µH) up to one Henry (1H).

NAND gate IC1a, crystal X1 and their associated components form a 2MHz oscillator. Its output is divided down by BCD counters IC2-IC4 (4518) to produce six test frequencies: 1MHz, 100kHz, 10kHz, 1kHz, 100Hz and 10Hz. These are then fed to two 4066 quad bilateral switches (IC6 & IC7).

As well as clocking IC2a, the 2MHz output from IC1a also clocks decade counter IC5 (4017). When a range select button is pressed, IC5's corresponding output (O0-O5) quickly goes high. This output in turn activates its corresponding bilateral switch to switch through the selected test frequency.

Parallel NAND gates IC1c & IC1d buffer this test frequency which is then fed via S1a and an 8.2Ω resistor to the gate of Mosfet Q1. As a result, when S1 is in the "MEAS" position, Q1 turns on and off at the test frequency and current pulses flow through the test inductor (via S1b and a 1kΩ series resistor).

Each time the current switches off, a back-EMF voltage is generated by the inductor. This voltage is then rectified and applied to a 100µA meter via VR1 and D7 (a BAT42 high-speed Schottky diode). Because back-EMF is proportional to inductance, the meter can be calibrated against a known inductance by adjusting VR1 until the correct reading is obtained. The remaining ranges are then automatically calibrated.

Finally, the test inductor can be checked for continuity by switching S1 to the "CONT" position. Provided the coil is OK, this turns on transistor Q1 and allows current to flow via a 4.7kΩ resistor to light LED1.

Gregory Freeman,
Mount Barker, SA. ($50)

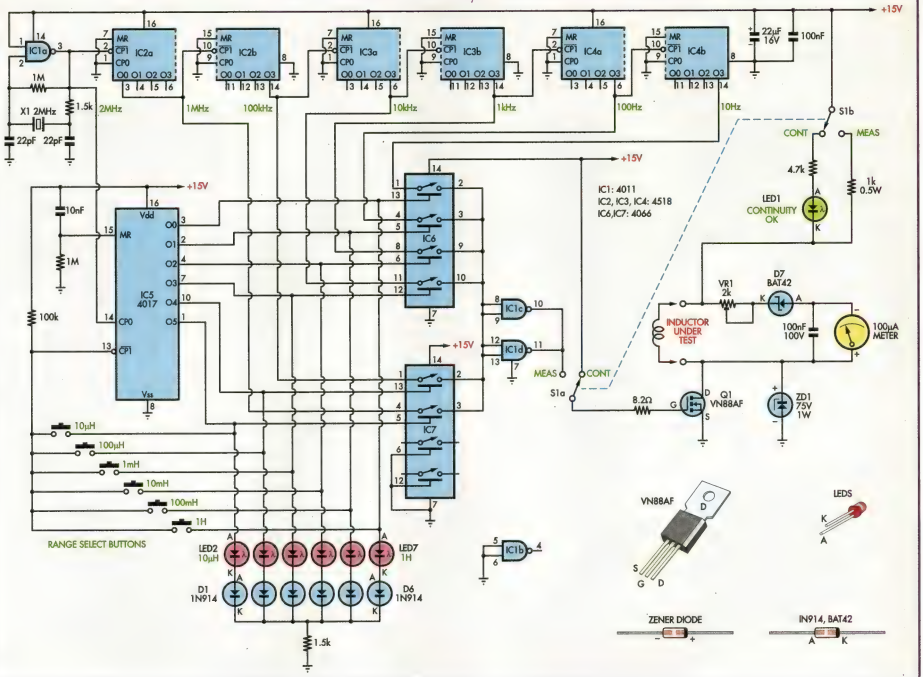
+15V
IC1a
IC2a
IC2b
IC3a
IC3b
IC4a
IC4b
MR
CP1
CP0
Q0 Q1 Q2 Q3
1M
1.5k
X1 2MHz
22pF
22pF
2MHz
1MHz
100kHz
10kHz
1kHz
100Hz
10Hz
22µF 16V
100nF
S1b
CONT
MEAS
4.7k
1k 0.5W
LED1
CONTINUITY OK
IC1: 4011
IC2, IC3, IC4: 4518
IC6,IC7: 4066
IC5 4017
Vdd
Vss
O0
O1
O2
O3
O4
O5
10nF
100k
IC6
IC7
IC1c
IC1d
MEAS
CONT
S1a
VR1 2k
D7 BAT42
INDUCTOR UNDER TEST
100nF 100V
100µA METER
8.2Ω
Q1 VN88AF
ZD1 75V 1W
10µH
100µH
1mH
10mH
100mH
1H
RANGE SELECT BUTTONS
LED2 10µH
LED7 1H
D1 1N914
D6 1N914
1.5k
IC1b
VN88AF
LEDS
ZENER DIODE
IN914, BAT42

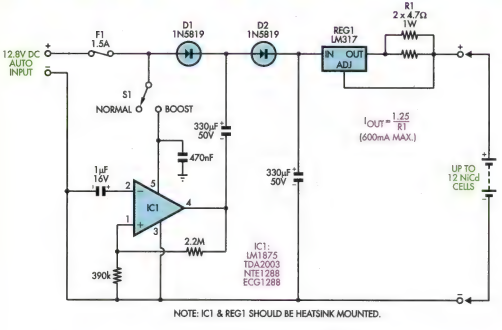

Simple circuit charges up to 12 NiCds

This handy circuit can be used to charge from one to 12 NiCd cells from a car battery. Up to six cells can be charged with switch S1 in the "normal" position. The LM317regulator operates as a simple current source, providing about 530mA when R1 = 2.35Ω (two 4.7Ω resistors in parallel).

For more than six cells, S1 is set to the "boost" position. This applies powers to IC1, a 10W (or 20W) audio power amplifier. Positive feedback from its output (pin 4) to non-inverting input (pin 1) causes IC1 to act as a square wave oscillator. This square wave signal is coupled to the junction of Schottky diodes D1 and D2 via a 330µF capacitor, forming a conventional charge-pump voltage doubler. Over 20V (unloaded) appears at the input to REG1 – enough to charge a maximum of 12 cells!

SILICON CHIP.

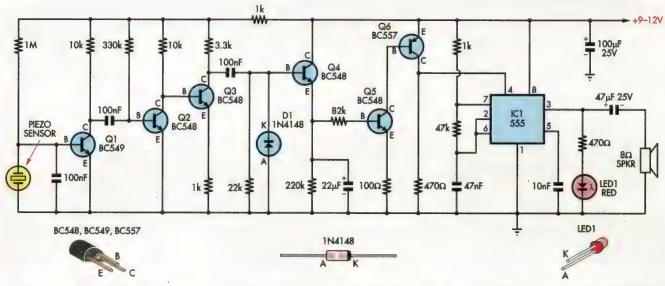

Simple knock alarm with piezo sensor

This circuit uses a thin piezoelectric sensor to sense the vibrations generated by knocking on a surface; eg, a door or table. Basically, it amplifies and processes the signal from the sensor and sounds an alarm for a preset period.

In operation, the piezoelectric sensor converts mechanical vibration into an electrical signal. This sensor can be attached to a door, a cash box, cupboard, etc using adhesive. A 1-1.5m long shielded cable can then be connected between the sensor plate and the input of the circuit.

The signal generated by the sensor is amplified by transistors Q1-Q3 which are wired as common-emitter amplifiers. The signal is then rectified by diode D1 and amplified by transistors Q4-Q6.

As shown, the output from Q6's collector is fed to pin 4 (reset) of 555 timer IC1. This is wired as an astable multivibrator. Each time Q6 turns on, its collector goes high and IC1 activates and produces an alarm tone in the speaker.

The alarm automatically turns off 10s after knocking ceases – ie, the time taken for the 22µF capacitor on Q4's emitter to discharge.

Finally, note that it may be necessary to adjust the 470Ω resistor in Q6's collector circuit to ensure that IC1 remains off in the absence of any perceptible knock. A value somewhere between 220Ω and 680Ω should be suitable.

Raj. K. Gorkhali,
Kathmandu, Nepal.

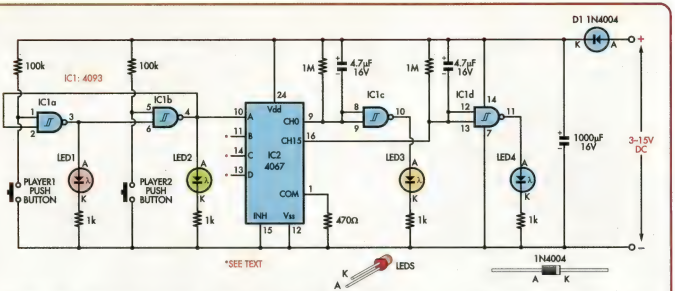

Gym agility: a simple strategy game

This simple circuit is a two-person game of strategy and speed – and potentially, agility and athletic fitness.

Each player has a row of four LEDs before him/her. Beside each LED, there is a pushbutton which, when pressed, lights up the corresponding LED. The aim of the game is for a player to illuminate all four of their LEDs in a row, in which case the circuit declares a winner.

However, there is a catch. As soon as you light one of your own LEDs, the other player's corresponding LED goes out – and vice versa. The game begins by giving each player two illuminated LEDs.

Consider now that this game is scaled up and used in a gym. If the LEDs in the circuit are directly replaced with N-channel power MOSFETs, then 12V globes can be illuminated (a MOSFET's gate is wired in place of a LED's anode, the source goes to negative, and the load is wired between the drain and positive).

If four large pushbuttons are mounted on one wall and four on another, this could become a game of agility – if not a physical tussle to keep the other player away from critical pushbuttons.

Here's how the circuit works: Schmitt NAND gate IC1a and IC1b (4093) form a simple bistable latch. When one output (pin 3) goes "high", the other output (pin 4) goes "low" and vice versa. The main advantage of using a bistable latch (as opposed to a flipflop) is that it does not suffer from switch bounce.

Four such bistable latches are fed to inputs A-D of IC2. However, for the sake of simplicity, only one of these is shown; ie, IC1a-IC1b.

We now need to identify when all four bistable latches go either "high" or "low". This is done using IC2, a 4067 16-channel multiplexer. When inputs A-D are all "low" (binary 0000), this opens decimal channel 0. Conversely, when all are "high" (binary 1111), this opens decimal channel 15. Channels 0 and 15 thus trigger a win for one side or the other, by taking pins 9 or 16 of IC2 "low".

Finally, if the game is quite hectic, a win might only last for a fraction of a second before it is lost again. Therefore, IC1c and IC1d are wired as timers, which do not permit any further play until a win has been reported for one or two seconds – either via LED3 or LED4. During this time, however, the players' buttons may be pressed to reset the game to two LEDs all.

Thomas Scarborough, Capetown, South Africa. ($35)

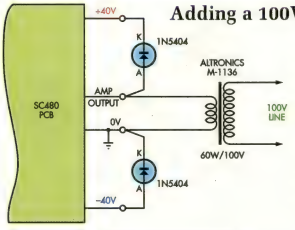

Adding a 100V line transformer to the SC480 amplifier

This circuit shows how to use the SILICON CHIP SC480 amplifier module to drive a 100V line transformer for PA work. The output of the amplifier directly drives the primary of the transformer, with the secondary then providing the 100V line output. Diodes D1 & D2 are included to protect the transistor output stage against back-EMF spikes which can be generated by the transformer if the amplifier is driven into clipping.

Note: the specified Altronics 100V line transformer has a primary DC resistance of 4Ω which lets it work satisfactorily with the amplifier's likely DC output offset of around ±30mV. The SC480 cannot be used with any line output transformer which has a primary resistance of less than 1Ω.

SILICON CHIP.

A "SMART" SLAVE FLASH TRIGGER

By JIM ROWE

Want to use an external flash unit with your new hi-res digital or film camera but it doesn't have a trigger socket or "hot shoe"? Cheer up, this new slave flash trigger will let you do it and it will cope with those cameras which only work in multiple-flash "red-eye reduction" mode. You can build it for a fraction of the cost of similar "smart" trigger units, too.

MOST OF THE LATEST digital still and film cameras have a built-in electronic flash, which at first glance seems great. The trouble is that it's almost impossible to take a good professional photo with only a single flash. They're OK for "happy snaps" but that fixed flash, right next to the lens and pointing in the same direction is a big problem. It gives very "flat" lighting and very dark shadows.

For much better modelling and control of shadows, you really need at least one additional source of light and/or a system of light diffusion. But neither of these options is easy with most digital cameras, not only because of their fixed forward-facing internal flash but because they generally don't have a "hot shoe" or conventional flash contact socket to trigger an external flash.

So the only way to trigger a second flash with these cameras is to use a slave flash trigger unit. This has an optical sensor which detects when the camera's own flash operates, to trigger an external "slave" flash.

But there is a further complication with many new digital cameras. Their internal flash often operates only in "red-eye reduction" mode, where the flash gives not just one single pulse of light but multiple flashes. There may be one, two or even a bunch of short pre-flashes shortly before the main flash.

This is done so that when you're taking portraits, the irises in your subjects' eyes are made to "stop down" before the main flash. This reduces the reflection of light from their retinas (the cause of that annoying red-eye effect).

It's nice that the camera makers do provide this feature to minimise the red-eye effect. But if you can't turn off red-eye reduction, it makes it impossible to use a conventional slave flash trigger. That's because the first pre-flash will trigger the slave flash unit, long before the camera takes the actual shot!

What's needed is a "smart" slave flash trigger unit which can ignore the red-eye reduction pre-flashes and only trigger the external flash when the camera's main flash occurs. That is exactly what this new trigger unit is designed to do.

This compact, low-cost unit counts up the camera flash pulses and only triggers an external flash unit when the last flash is detected. It operates

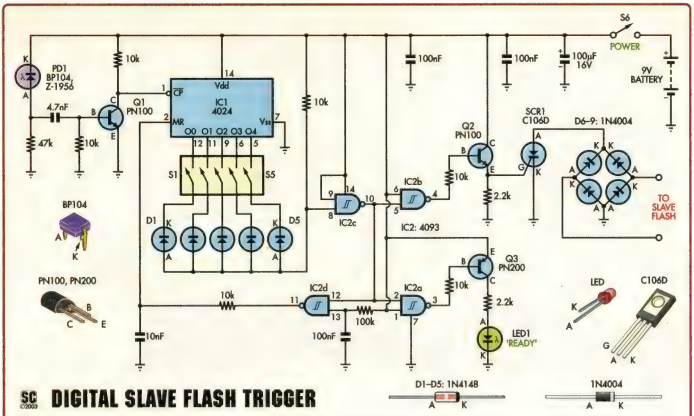

DIGITAL SLAVE FLASH TRIGGER

Fig.1: the camera flash is picked up by photodiode PD1 and this drives transistor Q1 which in turn clocks IC1. IC1 is wired as a programmable counter and the output of gate IC2c (pin 10) will go low only when the right number of pulses have been counted. IC2c then triggers SCR1 (via IC2b & Q2) to trigger the slave flash unit.

from a standard 9V battery and everything fits in one of the smallest jiffy boxes (UB5 size).

How it works

At first sight, the circuit of Fig.1 may look a little complex but there is not a lot to it.

PD1 is the photodiode which senses the camera flashes. For PD1 we're using either a BP104 or a Z-1956 (DSE) device. Actually these both have an inbuilt IR (infrared) filter but they still have more than adequate response to visible light to do the job here.

PD1 is connected in series with a 47kΩ load resistor across the 9V supply, as a reverse-biased light detector. To make the sensor insensitive to ambient lighting levels, we AC-couple its output to the base of transistor Q1 via a 4.7nF capacitor. As the base is pulled to ground via a 10kΩ resistor, Q1 is normally off; it only conducts briefly when the photodiode detects a flash of light. But during that time Q1 is switched on fully, so that a negative-going pulse of very close to 9V peak appears at its collector.

In other words, the combination of PD1, Q1 and the associated surrounding components forms a sensitive light-to-voltage pulse converter.

The pulses from Q1's collector are fed directly to the clock input of IC1, a 4024 binary counter which is connected as a programmable counter. To make IC1 programmable, we've added logic circuitry involving DIL switches S1-S5, diodes D1-D5 and gates IC2c & IC2d. The two gates are part of IC2, a 4093 quad Schmitt NAND device.

Programmable counter

The programmable counter works as follows. The cathodes of diodes D1-D5 are each connected to one of the five counter outputs O0-O4 via one of the DIL switches. The anodes of all five diodes are connected together and to +9V via a 10kΩ pull-up resistor.

This diode arrangement functions as a five-input AND gate, because the output (the junction of the five diode anodes and the 10kΩ resistor) can only be pulled up to +9V (logic high) when all five diode cathodes are also at logic high. If any diode cathode is pulled low, it pulls the output low as well.

So if we close switches S1 and S2, this means that the gate output can only go high when IC1 has counted three pulses (so that its outputs O0 and O1 both go high). We can therefore program the counter for any desired pulse count, simply by setting the DIL switches for the binary equivalent of that number. The switches can be set for a total pulse count between 1 and 31 – more than enough for our needs.

The output of the diode AND gate is connected to pin 8 of IC2c, used here as an inverter. And IC2c's output (pin 10) is connected to pin 12 of IC2d, which is again used as an inverter. Pin 11 of IC2d is connected to the master reset input (pin 2) of counter IC1 via a small RC delay circuit (series 10kΩ resistor and 10nF bypass capacitor). This means that shortly after the programmed count is reached, the counter is reset, ready for the next sequence of flashes.

By the way, the 100kΩ resistor and 100nF capacitor connected to the second input of IC2d (pin 13) form a simple power-up reset circuit, to ensure that the counter is reset to zero

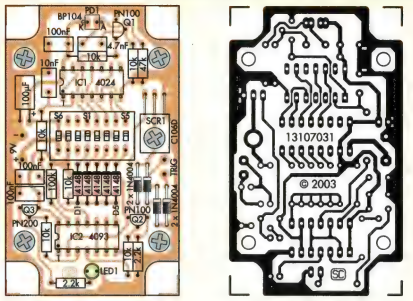

Fig.2: here's how to install the parts on the PC board. Note that the 100µF capacitor must be mounted on its side, while transistors Q1-Q3 must all be bent over so that they sit close to the board surface (see text). The full-size etching pattern for the PC board is at right.

when power is first turned on.

Summarising the action so far, we now have a light pulse sensor and counter which can be programmed using the DIL switches so that the output of IC2c (pin 10) will go low only when the right number of pulses have been counted. It also goes low only briefly (about 75µs), because of the way the counter is then quickly reset via IC2d.

This narrow pulse from IC2c is used to trigger the slave flash. It is inverted by IC2b which drives transistor Q2. The resulting narrow pulse at the emitter of Q2 is then used to switch on SCR1, which acts as the triggering "contacts" for our slave flash unit.

SCR1 is a 400V-rated C106D silicon-controlled rectifier, which is connected to the slave flash trigger input via the bridge formed by diodes D6-D9. The bridge ensures that the voltage applied across SCR1 from the flash unit is always of the right polarity (ie, positive to the anode), regardless of the circuitry inside your flash unit.

So that's how the main part of the trigger circuitry works. The only part left to explain is the purpose of gate IC2a, transistor Q3 and LED1. These provide a simple power-on indicator, as well as indicating that the counter circuit is reset and ready for the next flash pulse sequence.

Gate IC2a is again connected as a simple inverter, so that when the counter is reset and waiting for pulses, output pin 3 is held low (because pins 10, 2, 1 and 12 are high). This turns on PNP transistor Q3, which allows a low current (about 3.5mA) to pass through LED1. The LED therefore glows weakly, showing both that the power is turned on and that the counter has been correctly reset. The LED goes out for the duration of the slave flash trigger pulse but it comes back on again as soon as the counter resets.

The complete circuit draws only about 4mA from the 9V battery, which should therefore give a very long service life.

Construction

As can be seen from the photos, all of the slave flash trigger's circuitry fits on a small PC board which measures 76 x 45mm and is coded 13107031. The board has cutouts in each corner so it fits snugly inside a standard UB5-size plastic jiffy box, with the battery underneath.

The programming switches S1-S5 and power switch S6 are actually all part of an eight-way DIL switch, making it cheap and compact. This is mounted in the centre of the board. The leftmost switch is used for S6, while the five nearest the right-hand end are used for S1-S5. The two remaining switches are not used.

Photodiode PD1 is mounted at the top centre of the board. If a BP104 diode is used, a pair of PC board terminal pins are fitted in this position and the diode's very short leads soldered to the pins so that the top surface of the diode is 6mm above the board.

On the other hand, if you use a Z-1956 diode from Dick Smith Electronics, this has fairly long leads which can be soldered directly to the PC board pads. However in this case the leads also have to be bent by 90 degrees and cranked so that the diode's sensitive side is facing upward (again 6mm above the board) and directly above the two connection pads.

The complete PC board assembly is mounted behind the lid of the jiffy box, using four M3 tapped Nylon

Table 2: Capacitor Codes

Value	µF Code	EIA Code	IEC Code
100nF	0.1µF	100n	104
10nF	(.01µF)	10n	103
4.7nF	(.0047µF)	4n7	472

Table 1: Resistor Colour Codes

❑	No.	Value	4-Band Code (1%)	5-Band Code (1%)
❑	1	100kΩ	brown black yellow brown	brown black black orange brown
❑	1	47kΩ	yellow violet orange brown	yellow violet black red brown
❑	6	10kΩ	brown black orange brown	brown black black red brown
❑	2	2.2kΩ	red red red brown	red red black brown brown

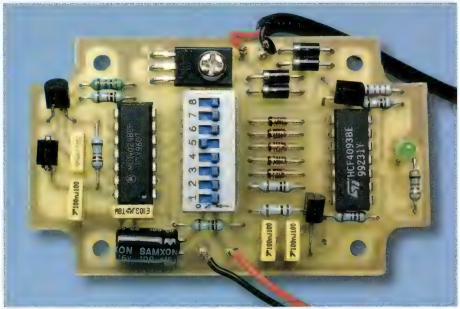

This is the fully-assembled PC board, ready for mounting inside the case. The DIP switch sets the number of flashes from the main flash unit before the slave is triggered (see text).

spacers 6.3mm long. The spacers are attached to the lid using four 6mm x M3 machine screws with countersink heads, while the board is fitted to the spacers using four round head 6mm x M3 machine screws with lock washers.

The lid has a central rectangular cutout to allow easy access to the switches and small circular holes top and bottom – one to allow light to reach PD1 and the other to allow LED1 to protrude through and be seen. The board mounting details should be fairly clear from Fig.3.

By mounting the board assembly only 6.3mm behind the box lid, we provide just enough room inside the box to fit the 9V battery – plus a sheet of thin plastic to ensure that the battery case can't short out any of the board wiring.

Assembling the board

The location of all of the parts on the PC board is shown in Fig.2. Note that because the board must be mounted only 6.3mm behind the case lid, some of the taller parts have to bent over so that they fit into this space.

We suggest you begin assembling the board by fitting the PC board terminal pins. There are two on the left side of the board for battery connections and another two on the right for the flash trigger output lead connections. If you are using a BP104 for PD1, you'll also need two more pins at the top centre. If the tops of all four/six pins are longer than 6.3mm, cut them so that they are only about 5mm long.

Now you can fit the resistors, which all mount flat down against the board. This is also the case with the diodes, which all mount with their cathode ends towards the top the board.

The capacitors can all be fitted next. Note that the 100µF electro mounts on its side as shown and make sure you get the polarity right.

Next, fit the SCR. It mounts with its "metal insert" face down against the board. All three leads are bent down at 90° at a distance of 5mm from the body, so they pass through the board holes. The device itself is held down using a 6mm x M3 machine screw and nut.

IC1 and IC2 can be fitted next, taking care to fit them the correct way around. Observe the usual precautions to avoid damage due to static charge, too – remember that both devices are CMOS types.

Now fit the three transistors. These all have to be mounted leaning over so they will allow the board assembly to be fitted only 6.3mm behind the case lid.

For the two PN100 devices, this is achieved by carefully bending their three leads so the centre base lead is about 3mm shorter than the other two when they are passed down through the board holes. In other words these transistors have their leads bent so they are mounted leaning back, with the short base lead underneath and the two longer leads bending down at about 60°.

There isn't space to mount the PN200 transistor Q3 in this way, because it's quite close to one of the

Electronics TestBench

This is it: the one you've been asking for! SILICON CHIP's ELECTRONICS TEST BENCH is a valuable 128-page collection of the best test equipment projects from the pages of Australia's best electronics magazine.

Available direct from the publishers

ONLY $13.20 INC P&P AND GST

Silicon Chip Publications, PO Box 139, Collaroy, NSW 2097
Phone Orders: (02) 9979 5644 Fax Orders: (02) 9979 6503 Email Orders: office@silchip.com.au

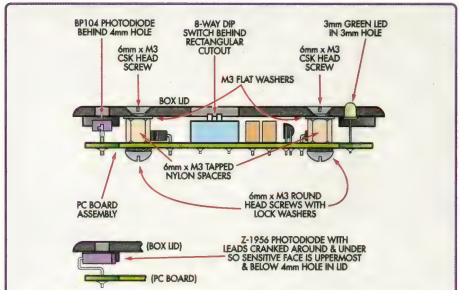

Fig.3: the PC board is attached to the lid of the case on 6.3mm spacers and secured using machine screws, nuts and washers. Also shown here is the mounting detail for the Z-1956 photodiode (see text).

The close-up view shows the completed assembly, just before it is fitted to the case. The flash trigger lead emerges through a small semicircular notch near the top centre of one side of the jiffy box.

Nylon mounting spacers. So Q3 has all three leads bent at 90° towards the emitter side, so it can be mounted "side on" with its body between IC2 and the 100kΩ resistor. The flat side of the body is towards the 100kΩ resistor, with the emitter lead lowest and the collector lead uppermost.

The 8-way DIP switch is fitted next, taking care to fit it with the 'ON' side of the switches towards IC1. Also make sure when you're soldering its pins to the board pads that you don't accidentally link the pads with fine solder bridges.

Now fit photodiode PD1. If you're using a BP104 device, you need the extra two PC board pins, as noted above. Cut off both pins at a point 3mm above the board. Then very carefully bend the leads of the BP104 down at right angles about 1mm from the body and solder them to the PC board pins. The flat top of the diode should be horizontal and just 6mm above the top of the board. Make sure you solder the diode's cathode lead (the one with the small side tag) to the pin furthest from transistor Q1.

The procedure is a bit different if you are using the Z-1956 photodiode from DSE. This doesn't need the PC board pins, but it does need both of its leads first bent down at 90° (ie, away from the sensitive front face), at about 2mm from the body. Then they are bent inwards by a further 90°, at a point only about 2mm behind the diode's rear face, and finally outwards again at a point 3mm from the top of the body. This allows the diode to be mounted with its leads passing down through the two inner holes on the board, with its sensitive front face uppermost and horizontal, and again 6mm above the board.

Remember that the Z-1956 should be fitted so that its cathode lead is furthest from Q1. The way to identify this lead with the Z-1956 diode is by noting that it's on the same side of the device as the small top bevel. All these component mounting details should be apparent from Fig.2 and Fig.3.

With the photodiode fitted, only two steps remain to complete the PC board assembly. One is to fit the 3mm Ready LED, making sure that the longer anode lead is nearest to the 2.2kΩ series resistor and the "flat" side of the body is towards the 10kΩ resistor. Also take care that you solder the leads with the LED and its leads truly vertical, and with the bottom of the LED's body just 5mm above the board.

The final step is to connect the 9V battery clip lead, the wires of which connect to the PC board terminal pins over on the lefthand side. Note that the red wire connects to the lower pin (ie, the one nearer the two 100nF capacitors), while the black wire connects to the upper pin (nearer the 100µF electro).

Preparing the case

Your board assembly should now be complete, and you can put it aside while you prepare the box lid. If you're building the project from scratch, this will involve drilling and cutting the required holes using the drilling template of Fig.4 as a guide.

Note that the four 3mm holes for the board mounting spacer screws are countersunk at the top, so that the tops of the screws will be flush with the lid's upper surface. This allows them to be hidden beneath a stick-on front panel if one is used.

Once the lid is prepared, you can attach the four 6.3mm tapped Nylon spacers to it using four 6mm x M3 countersink-head machine screws plus four M3 flat washers (see Fig.3). Then you should be able to mount the PC board assembly on the four spacers in turn, using four 6mm x M3 round-head screws and lockwashers.

There's only one remaining step before you can try out the trigger unit and finish its assembly. This is to fit a suitable output lead, to connect to the external flash unit it will be triggering. The main requirement here is that the lead you use will need to be fitted at the far end with a connector to suit the trigger input of the flash unit.

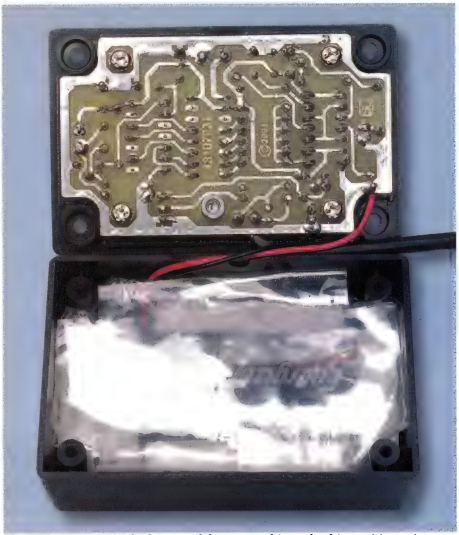

The 9V battery sits in the bottom of the case and is wedged in position using pieces of foam. A sheet of plastic is then fitted over the top of the battery, to prevent it shorting against the bottom of the PC board.

Parts List

1 PC board, code 13107031, 45 x 76mm
1 Jiffy box, UB5 size (83 x 54 x 28mm
1 8-way DIL switch (S1-S5, S6)
1 9V alkaline battery, 916/PP3 type
1 battery clip lead to suit
6 PC board terminal pins
4 6.3mm M3 tapped spacers (Nylon)
4 6mm x M3 screws, countersink head
4 6mm x M3 screws, round head
1 6mm x M3 machine screw & M3 nut
4 M3 flat washers
1 flash trigger lead with connector

Semiconductors
1 4024 binary counter (IC1)
1 4093 quad Schmitt NAND (IC2)
1 C106D 400V SCR (SCR1)
2 PN100 NPN transistors (Q1,Q2)
1 PN200 PNP transistor (Q3)
1 BP104 or Z-1956 photodiode (PD1)
1 3mm green LED (LED1)
5 1N4148 diodes (D1-D5)
4 1N4004 diodes (D6-D9)

Capacitors
1 100μF 16V electrolytic
3 100nF (0.1μF) MKT polyester
1 10nF (.01μF) MKT polyester
1 4.7nF (.0047μF) MKT polyester

Resistors (0.25W, 1%)
1 100kΩ 6 10kΩ
1 47kΩ 2 2.2kΩ

If the flash unit has a conventional 3mm concentric connector, your best approach is probably to buy a short flash extension lead from a photographic store and cut off the unwanted connector so the wires at the free end can be soldered to the output pins on the trigger unit board.

On the other hand, if your flash unit is only fitted with a "hot foot" connector, you will have to either salvage a matching "hot shoe" connector from a junked camera or make one yourself. This could be done with some pieces of blank PC board laminate or some 1mm sheet brass and a piece of insulating material. That done, the hot shoe connections can be wired to the trigger unit's output pins with a length of shielded audio cable.

Checkout time

Ready to roll? Make sure all the DIP switches are set to the Off (down) position and connect a 9V battery to the clip lead. Then switch on S6 and the green Ready LED should light.

Now connect your slave flash unit to the trigger unit's output lead and turn on its own power switch so the flash capacitor becomes charged and ready for action. Also get your camera ready and set it for flash operation.

To check out the trigger unit's basic operation, set its switch S1 to the On position and then press the shutter release of the camera to produce a flash (or more than one, if it's only capable of working in red eye reduction mode).

You don't need to aim the camera flash at the trigger unit's sensor – aiming it at the ceiling should be fine. As soon as the camera's flash (or first flash) occurs, you should also see the slave flash fire. Assuming this is the case, your trigger unit is probably working correctly.

If not, you may have made a wiring mistake somewhere. Perhaps you've connected a component the wrong way around or bridged a couple of tracks on the board with a whisker of solder. So turn off the flash unit and disconnect it from the trigger unit, then unclip the trigger unit's 9V battery and look for the problem.

Once the trigger unit is operating correctly, you can then set the DIP switches so that the trigger unit only operates the slave flash in response to

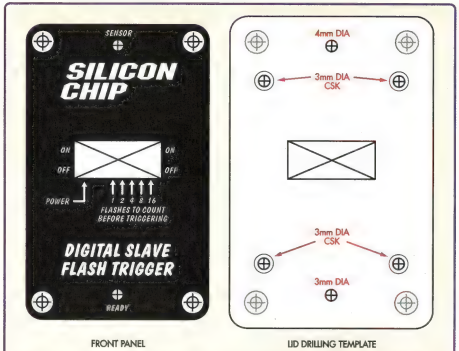

Fig.4: here are the full-size artworks for the front panel and the drilling template for the case lid.

the camera's main flash. Of course, if the camera is able to be operated in normal single-flash mode, there's nothing further to be done.

Setting the flash count

You've already set the trigger unit to respond to the first camera flash, by turning on only DIP switch S1. As you've probably realised by now this is the correct setting for cameras that can operate in this mode.

Even if your camera can only operate in multi-flash red-eye reduction mode, it's still quite easy to find the correct switch setting. You don't have to count exactly how many flashes the camera does produce for each shot. Just have a guess and set the trigger unit's switches initially to that figure.

For example, if you think it produces five flashes in all (four pre-flashes and the main flash), turn on switches S1 (1) and S3 (4). Then press the camera's shutter release to take a 'shot', and see if the slave flash is triggered.

If it does fire, you've either guessed the total number of camera flashes correctly or you have underestimated.

To find out which, increase the switch setting by one (ie, S1 off, and S2 and S3 on, for 2 + 4 = 6) and try again. If the slave flash still operates, you did underestimate the number of camera flashes the first time - so increase the setting by one more and try again.

On the other hand, if the slave flash doesn't fire this second time, your previous guess must have been correct. In this case, return the switches to their previous setting and your trigger unit is correctly set up.

In short, the correct setting for the trigger unit's flash count programming switches is the highest count that still results in the slave flash being triggered for each flash shot - because it's being triggered on the last and 'main' camera flash.

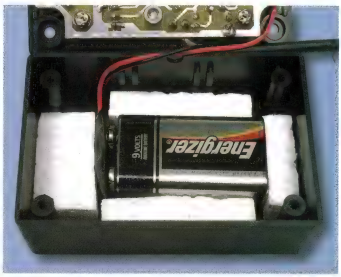

This view shows how the 9V battery is wedged in position using polystyrene foam. Note the semi-circular groove in the back of the case for the flash trigger lead.

Final assembly

Once you've completed this check-out and setting up procedure, your trigger unit is ready for final assembly. Just before doing this, though, you'll need to file a small semicircular notch near the top centre of one side of the jiffy box, to allow the output trigger lead to exit the box when it's assembled.

To work out exactly where the notch should be located, offer the lid and PC board assembly up to the top of the box, and mark the position where the lead will need to exit for minimum strain on the lead and the connections. Then file the notch with a jeweller's rat-tail file, making it only just large enough for the lead – so that when the lid is screwed to the box, the lead will be securely clamped.

Now place the 9V battery (still connected to the trigger board via the clip lead) in the centre of the box, and cut four small pieces of expanded polystyrene foam to go around it and hold it in position. That done, cut a piece of thin sheet plastic (or presspahn insulating material) to the same size and shape as the trigger unit PC board, to provide an insulating layer above the battery.

You can now carefully fit the lid/board assembly to the box, winding the battery lead carefully around so it doesn't get caught between the edge of the lid and the box rim. The final step is fitting the four screws provided with the box, to hold everything together firmly.

Your slave flash trigger unit should now be complete and ready for some serious flash photography. **SC**

SILICON CHIP WebLINK

How many times have you wanted to access a company's website but cannot remember their site name?

Here's an exciting new concept from SILICON CHIP: you can access any of these organisations instantly by going to the SILICON CHIP website (*www.siliconchip.com.au*), clicking on WebLINK and then on the website graphic of the company you're looking for. It's that simple. No longer do you have to wade through search engines or look through pages of indexes – just point'n'click and the site you want will open!

Your company or business can be a part of SILICON CHIP's WebLINK. For one low rate you receive a printed entry each month on the SILICON CHIP WebLINK page with your home page graphic, company name, phone, fax and site details plus up to 50 words of description – and this is repeated on the WebLINK page on the SILICON CHIP website with the link of your choice active. Get those extra hits on your site from the right people in the electronics industry – the people who make decisions to buy your products. Call SILICON CHIP today on (02) 9979 5644

A 100% Australian owned company supplying frequency control products to the highest international standards: filters, DIL's, voltage, temperature compensated and oven controlled oscillators, monolithic and discrete filters and ceramic filters and resonators.

Hy-Q International Pty Ltd

Tel:(03) 9562-8222 Fax: (03) 9562 9009
WebLINK: www.hy-q.com.au

At **QUESTRONIX** we specialise in conversion, switching and distribution equipment for VGA, video and audio. We have been serving the audiovisual industry as well as pro, semi-pro and domestic a-v equipment users since 1988. As well as being a 100% Australian manufacturer we also import a range of innovative and interesting items.

QUESTRONIX

Tel: (02) 4343 1979 Fax: (02) 4341 2799
WebLINK: www.questronix.com.au

BitScope is an Open Design Digital Oscilloscope and Logic Analyser. PC software drives BitScope via USB, Ethernet or RS232 to create a powerful Virtual Instrument. BitScope is available built and tested or in kit form. Extensive technical details are available on the website. Great for hobbyists, university labs and industry.

BitScope Designs

Contact: sales@bitscope.com
WebLINK: bitscope.com

JED designs and manufactures a range of single board computers (based on Wilke Tiger and Atmel AVR), as well as LCD displays and analog and digital I/O for PCs and controllers. JED also makes a PC PROM programmer and RS232/RS485 converters.

Jed Microprocessors Pty Ltd

Tel: (03) 9762 3588 Fax: (03) 9762 5499
WebLINK: jedmicro.com.au

We specialise in providing a range of Low Power Radio solutions for OEM's to incorporate in their wireless technology based products. The innovative range includes products from **Radiometrix**, the World's leading manufacturer.

TeleLink Communications

Tel:(07) 4934 0413 Fax: (07) 4934 0311
WebLINK: telelink.com.au

RCS Radio has available **EVERY PC Board** ever published in SILICON CHIP, EA, ETI and AEM (copyrighted boards excepted). Many late boards are available ex stock, others can be made to order within a few days.Custom & production boards too!

RCS Radio

Tel: (02) 9738 0330 Fax: (02) 9738 0334
WebLINK: cia.com.au/rcsradio

For everything in radio control for aircraft, model boats and planes, etc. We also carry an extensive range of model flight control modules including GPS, altitude and speed, interfaces, autopilot and groundstation controllers. More info on our website!

Silvertone Electronics

Tel:(07) 4639 1100 Fax: (07)4639 1275
WebLINK: www.silvertone.com.au

PIC chip specialists – microEngineering Labs and others. Easy to learn, easy to use, sophisticated CPU based controllers & peripherals.

See our website for new range of ATOM products!

MicroZed Computers

Tel: (02) 6772 2777 Fax: (02) 6772 8987
WebLINK: microzed.com.au

Hifi upgrades & modification products - jitter reduction and output stage improvement. Danish high-end hifi kits - including pre-amps, phono, power amps & accessories. Speaker drivers including Danish Flex Units plus a range of accessories. GPS, GSM, AM/FM indiv. & comb. aerials.

Soundlabs Group

Syd: (02) 9660-1228 Melb: (03) 9859-0386
WebLINK: soundlabsgroup.com.au

We stock the full range of fischertechnik robotic kits and models plus spare parts, computer interfaces and control software. Learn about industrial automation and robotics with fischertechnik. See our website for the latest news and FREE software downloads. Don't forget to mention this ad for a 5% discount!

Procon Technology

Tel: (03) 9830 6288 Fax: (03) 9830 6481
WebLINK: procontechnology.com.au

International satellite TV reception in your home is now affordable. Send for your free info pack containing equipment catalog, satellite lists, etc or call for appointment to view. We can display all satellites from 76.5° to 180°.

Av-COMM Pty Ltd

Tel:(02) 9939 4377 Fax: (02) 9939 4376
WebLINK: avcomm.com.au

We're one of Australia's most innovative electronic equipment suppliers. For over 10 years we've served Australian industry with an extensive range of electronic components and equipment from the world's leading suppliers. We ensure our customers have the best selection and service.

Clarke & Severn Electronics

Tel: (02) 9482 1944 Fax: (02) 9482 1309
WebLINK: clarke.com.au

By TRENT JACKSON

A programmable continuity tester

No matter how high-falutin' is your involvement with electronics, one of the most common bench tests is for continuity. And sure, you can always rake out the multimeter but this little tester does a better job, with selectable resistances. It makes an ideal Go/No Go Tester.

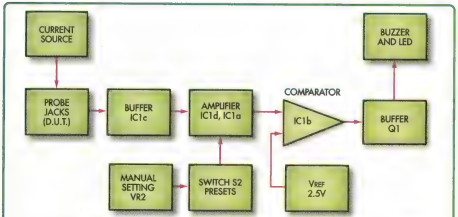

Fig.1: the block diagram of the Programmable Continuity Tester. It feeds a current through the device under test (DUT) and the resulting signal is then buffered, amplified and compared with a reference voltage.

LET'S FACE IT, almost every analog and digital multimeter does have built-in capabilities for testing continuity. However, this function is somewhat limited. Most DMMs are preset to beep that little miniature buzzer inside when the continuity is below about 40Ω or so. Wouldn't it be nice to have a device that allows you to set this minimum continuity to anywhere between 1Ω and 100Ω? Well, that is exactly what this project does. It is accurate, reliable and works very well.

It can be used to check the resistance of all sorts of low resistance devices: lamp filaments, motor windings, relays, switches, transformers, speak-

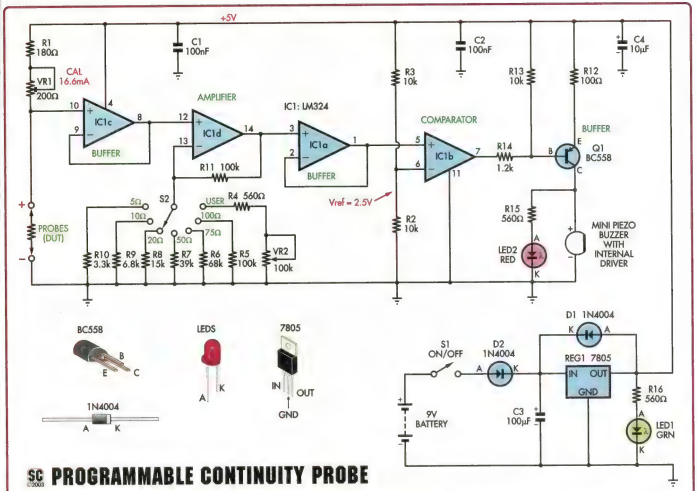

PROGRAMMABLE CONTINUITY PROBE

Fig.2: most the circuit functions are performed by a single LM324 quad op amp IC. These initially buffer and amplify the signal from the DUT, after which the signal is compared against a fixed voltage reference in IC1b. The output of IC1b then drives a buzzer and indicator LED via transistor Q1.

ers, wiring harnesses or you name it. It's ideal for auto electrical work and a host of other applications.

Features

It features six preset levels: 5Ω, 10Ω, 20Ω, 50Ω, 75Ω and 100Ω, selected by a rotary switch. Now if any resistance that you measure is less than the preset value, the buzzer sounds and a red LED lights. Then there is provision for presetting any value over the range of 1Ω to 100Ω. Provided the resistance you measure is then less your preset value, the buzzer sounds and the red LED lights.

The circuit uses just one low-cost op amp package, a 3-terminal regulator and not much else. Fig.1 shows the block diagram of the circuit and while it shows a lot of boxes, the concept is really quite straightforward. There is a current source to feed the device under test (DUT), three op amps used as buffer and amplifier stages, a comparator and buffer, and the LED and buzzer.

Fig.2 shows the full circuit diagram and as you see, it uses just one LM324 quad op amp to do most of the circuit functions. A 3-terminal regulator (REG1) derives a fixed 5V from the 9V battery. The fixed 5V is required because the current source and comparator rely on having precise voltage levels.

Resistor R1 and trimpot VR1 set the maximum current (into a short circuit) for the device under test (DUT) at 16.6mA. The voltage developed across the DUT is then buffered by IC1c, connected as a unity gain voltage follower. This is followed by IC1d which has its gain set by seven resistors (trimpot VR2 included).

The output of IC1d goes to another unity buffer (IC1a) and is then fed to pin 5 of IC1b which is connected (no feedback) as a comparator. Pin 6 is connected to a voltage divider which means its level is +2.5V. Now if pin 5 is less than the +2.5V at pin 6, the output of the comparator goes low to turn on transistor Q1, the buzzer and LED2.

Half-supply reference

The key fact about this circuit is the +2.5V at pin 6 of IC1b; everything relies on this.

Now we'll backtrack a bit, to see how the circuit functions when testing an actual resistance.

Let's say that you want to check continuity (ie, resistance) of less than 5Ω, so you set that with the rotary switch. Now you connect a 4.7Ω resistor across the test terminals. As previously noted, VR1 is set to provide a maximum current into the DUT of 16.6mA. Now because the DUT is 4.7Ω, the voltage developed across it will be 4.7 x .0166 = 78mV.

This is passed through the unity gain buffer unchanged (that's what a

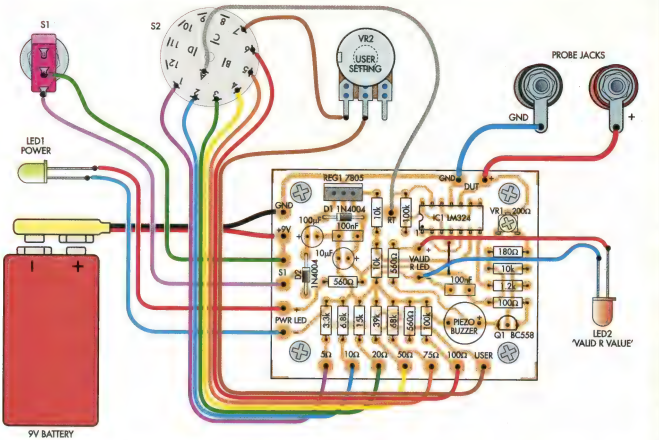

Fig.3: the assembly is straightforward but take care with the switch wiring, as it's easy to make a mistake with the connections. Take care also when installing the semiconductors, as these can easily be damaged if mounted the wrong way around on the PC board.

unity gain buffer does!) and fed to IC1d, where it will be amplified by a factor of 31.3, as set by resistors R11 and R10. So the voltage at the output of IC1d will be 0.078 x 31.3 = 2.44V. This is less than the +2.5V at pin 6 of IC1b and so Q1 will be turned on to sound the buzzer and light LED2.

The same process happens with the other resistance ranges. The gain of IC1d is changed via the switchable resistors to suit the selected threshold resistance.

Now some readers won't be happy with the above description. "Hang on a minute" they'll say. "The current set by trimpot VR1 is nowhere near constant and will be quite a bit less for higher resistances around 100Ω than for low resistance values". And they will be right. But that does not alter the validity of the circuit, because the gain resistors selected by the rotary switch have been selected with this factor in mind.

If you have trouble accepting this, let's try another example, this time using the 100Ω range. And this time, let's make the device under test (DUT) a resistance of 95Ω. We said before

Table 1: Resistor Colour Codes

❑	No.	Value	4-Band Code (1%)	5-Band Code (1%)
❑	2	100kΩ	brown black yellow brown	brown black black orange brown
❑	1	68kΩ	blue grey orange brown	blue grey black red brown
❑	1	39kΩ	orange white orange brown	orange white black red brown
❑	1	15kΩ	brown green orange brown	brown green black red brown
❑	3	10kΩ	brown black orange brown	brown black black red brown
❑	1	6.8kΩ	blue grey red brown	blue grey black brown brown
❑	1	3.3kΩ	orange orange red brown	orange orange black brown brown
❑	1	1.2kΩ	brown red red brown	brown red black brown brown
❑	3	560Ω	green blue brown brown	green blue black black brown
❑	1	180Ω	brown grey brown brown	brown grey black black brown
❑	1	100Ω	brown black brown brown	brown black black black brown

The PC board and battery holder are mounted on the lid of the case, as shown in this photo (see text). Use several cable ties to keep the wiring neat and tidy but leave enough slack in the wiring so that the lid can be opened out.

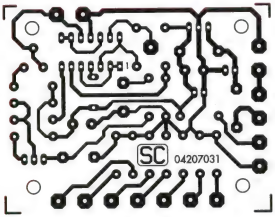

Fig.4: check your PC board against this full-size etching pattern before installing any of the parts.

Parts List

1 PC board, 70 x 55mm, coded 04207031.
1 plastic utility box, 130 x 67 x 44mm
1 label to suit box
2 knobs to suit rotary switch and potentiometer
1 SPST toggle switch (S1)
2 5mm LED bezels
2 panel mount banana sockets, one red, one black
1 9V battery
1 9V battery holder
4 adhesive PC board standoffs (Jaycar HP-0760; pack 25)
1 1-pole 12-position rotary switch (S2)
1 self-oscillating piezo buzzer; Jaycar AB-3459 or equivalent
2 cable ties
Rainbow cable
1 200Ω horizontal mount trimpot (VR1)
1 100kΩ linear potentiometer (VR2)

Semiconductors
1 LM324 quad op amp (IC1)
1 7805 5V 3-terminal regulator (REG1)
1 BC558 PNP transistor (Q1)
1 5mm green LED (LED1)
1 5mm red LED (LED2)
2 1N4004 silicon diodes (D1, D2)

Capacitors
1 100μF 16V PC electrolytic
1 10μF 16V PC electroytic
2 100nF (0.1μF) MKT polyester or monolithic

Resistors (1%, 0.25W)

2 100kΩ	1 3.3kΩ
1 68kΩ	1 1.2kΩ
1 39kΩ	3 560Ω
1 15kΩ	1 180Ω
3 10kΩ	1 100Ω
1 6.8kΩ	

that trimpot VR1 is adjusted to give a maximum test current (into a short circuit) of 16.6mA. By the magic of Ohm's Law and the specified 5V supply, this means that the total resistance of R1 and trimpot VR1 is 300Ω. Try it: 5V/300Ω = 16.6mA.

Therefore when we connect 95Ω across the DUT terminals, the total current flowing will be 5V/395Ω = 12.7mA (we never said the test current was fixed!). The resulting voltage across the 95Ω resistance is 1.2V and this is amplified in IC1d by a factor of 2, giving 2.4V at pin 5 of comparator IC1b. Once again, the output of IC1b will be low, Q1 will turn on and the buzzer will sound.

We'll leave it to you to confirm the principle on other ranges but don't worry, it does. In fact, in theory, trimpot VR1 could have been omitted and R1 specified as 300Ω and the circuit would work identically. Trimpot VR1 is really only required to cope with slight tolerance variations in the circuit components.

Putting it together

All the circuit components, with

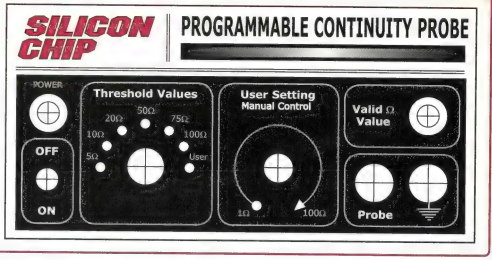

Fig.5: this full-size artwork can be used as a drilling template for the front panel. Note that it's best to make the larger holes by drilling small pilot holes first and then carefully enlarging them to size using a tapered reamer.

the exception of the rotary switch and potentiometer VR2, are mounted on a PC board measuring 70 x 55mm and coded 04207031. The parts overlay and wiring diagram is shown in Fig.3.

Assembly is very straightforward. Mount all the PC pins (18 required) first, followed by the resistors and diodes. Make sure the diodes are in the right way around and the same comment applies to the two electrolytic capacitors. Then mount the polarised piezo buzzer, the transistor, 3-terminal regulator and the LM324 IC.

The finished PC board mounts on the lid of the case using four adhesive standoffs (Jaycar HP-0760; pack 25). The battery holder is mounted on the lid with a dob of hot-melt glue or you could use double-sided foam tape. All front panel components are mounted on the base of the case so you can fit the label to the case and use it as a drilling template for the on/off switch, two LED bezels, rotary switch, potentiometer (VR2) and the two banana plug sockets.

Rotary switch setup

The rotary switch needs to be set to provide seven positions before it is mounted in the case: pull off the indexing washer and set it back on the threaded bush to give the right number of positions. Try it by hand before you mount it in position.

Once the case hardware is mounted, complete all the wiring as shown in Fig.3. When all is complete, carefully check your work and then fit a 9V battery and switch on. The green LED should light.

Now switch your multimeter to the 200mA range and connect it across the test terminals. Adjust VR1 for a current of 16mA.

That done, switch down to the 20mA range and readjust VR1 to obtain a reading of 16.6mA.

Now do a series of checks to see that each range gives the correct buzzer result (and with the red LED lit), using suitable test resistors for each range. That's it: make up a pair of banana plug test leads and you now have a very useful Programmable Continuity Tester. **SC**

Here's how to insure your investment in

Are your SILICON CHIP copies getting damaged or dog-eared just lying around in a cupboard or on a shelf? Can you find that particular issue you need to refer to?

- ✓ Easy to use
- ✓ Economical
- ✓ Each binder holds up to 12 issues
- ✓ And they look good, too!

Keep your copies safe, secure and always available with SILICON CHIP binders.

Available Aust. only. Prices include GST. Order direct from SILICON CHIP: phone (02) 9979 5644 or fax (02) 9979 6503.

PC CONTROLLED MOVING MESSAGE DISPLAY KIT: This kit has been redesigned to use super-bright dot matrix displays (available in red & orange) making it cheaper, easier to assemble and more attractive. Two or more of these kits can be cascaded to form a much longer display. Operates from a PC's parallel port. Requires 7-12V DC or 5-10V AC, not supplied. This kit includes PCB and all on-board components including dot matrix displays. The software is not supplied but can be downloaded. Alternate software can be downloaded from **http://skywebs.com/~glenn/LEDsign.htm**

Kit with RED DISPLAYS: (K100R) $109
with **ORANGE DISPLAYS:** (K100Y) $119
SUITABLE PLUGPACK: 9V @ 500mA: (PP14) $10

(USED) BWD 603B FUNCTION GENERATOR MINI-LAB: More info on our web site $260 (zc0211)

(USED) ROHDE & SCHWARZ SMS SIGNAL GENERATOR: Outputs 0.1 to 520MHz. $600 (zc0214)

VALVE PRE-AMPLIFIER KIT: Bring back the warmth of that old valve pre-amp with this simple to build kit. It requires a single 9VAC or 9-12VDC supply. The single PCB can be cut to separate the power supply section of the circuit. Kit includes power adaptor. PCB, and all onboard components including RCA connectors & valve. k188A $33.

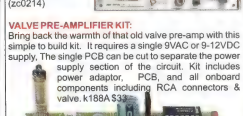

Electrical energy from waste heat? Charge batteries from a log fire?

All sounds a bit incredible. Well now you can turn heat from the sun, a fire, or a car exhaust in to electrical energy. We now have in stock these amazing THERMO-ELECTRIC DEVICES They can be used to produce power to charge batteries or for our LED Lamp Kits etc. These devices simply mount between two metal blocks or heatsinks and generate power when one side is kept as cool as possible and the other side is kept hot. We are selling these devices for under $60. When coupled with our New 3V inverter kit can be used to charge a 12V, 24V and other batteries. More info on our web site.

o a t l e y e . c o m

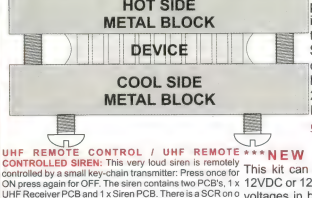

UHF REMOTE CONTROL / UHF REMOTE CONTROLLED SIREN: This very loud siren is remotely controlled by a small key-chain transmitter: Press once for ON press again for OFF. The siren contains two PCB's, 1 x UHF Receiver PCB and 1 x Siren PCB. There is a SCR on a the receiver PCB that can switch a 4A load. There are two wires interconnecting these so the siren-UHF receiver can easily be separated to serve as stand-alone units. The Motorola encoder IC used in the transmitter is an MC145026 and its matching MC145028 is used in the receiver. These are both readily available. The whole kit is supplied in its original packing and it also includes a 12V cigarette lighter lead, and suitable Australian power adaptor. The unit is new and guaranteed except for the batteries. In a few units tested the 12V lighter battery in the transmitter was OK but the 8.4V Nicad back-up battery in the siren needed charging. Siren-RX: 30M range, 6-13.8V operation, 1mA stand-by, 120dB output, 500mA consumption when on.

*****NEW INVERTER KIT***** This kit can be configured for 24VDC to 12VDC or 12VDC to 24VDC or even some voltages in between. It was tested with a 100W load but greater heatsinking will be required above 50W. Voltage selection is done by changing the value of a resistor and by changing the number of turns on the transformer. The transformer is easy to construct & requires only an average of about 20 turns on the primary and secondary windings. Ideal for car stereo & GPS systems etc in trucks with 24VDC systems or to charge laptops in cars. Kit includes PCB, all onboard components & parts to make the simple transformer.

BARGAIN 12VAC POND PUMP
Why spend a small fortune on a new water feature when you could build your own. Requires 12VAC (We have a suitable plug-pack available for just$6). Pumps a head of up to 500mm at 300L p/h via a 8mm outlet. (PP1)

nRF401 TRANSCEIVER MODULE based on the nRF401 single chip UHF transceiver designed to operate in the 433MHz frequency band. It features Frequency Shift Keying (FSK) modulation and demodulation capability. nRF401 operates at bit rates up to 20kbit/s. Transmit power can be adjusted to a maximum of 10dBm. nRF401 features a standby mode. Operates from a single +3 - 5V DC supply. Frequency Ch#1/Ch#2 433.92 / 434.33 MHz. Modulation FSK, Max RF output power Supply voltage DC 2.7-5.25 V Receive supply current 11 mA Transmit supply current @ -10dBm RF output power 8 mA Standby supply current 8 uA. PCB size 31 X 22 X 10mm

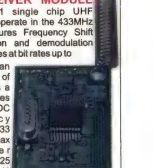

Bargain postage rates on our 12V / 7Ah sealed lead acid batteries. We are overstocked on these fresh stock batteries so now is the time to pick up a real bargain, 2.6kg, 150 x 65 x 92mm.PB6 $25. For the months of July and August we will post any quantity of batteries to NSW, Bris. Adel & Melb. for just $7. Ask about our discounted rates to other locations.

DON'T PAY A SMALL FORTUNE THIS HAS TO BE THE QUICKEST, EASIEST & CHEAPEST WAY EVER TO STORE AND TRANSPORT DATA
SEE THE REVIEW THIS ISSUE OF SILICON CHIP
These fantastic little devices will hold much more data than a floppy disk and have much better data retention. How many times have you lost data on a corrupted floppy? Or the file is too big to fit a floppy disk?

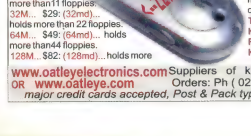

16M... $24:- (16md)...holds more than11 floppies.
32M... $29: (32md)... holds more than 22 floppies.
64M... $49: (64md)... holds more than44 floppies.
128M... $82: (128md)...holds more

LONG RANGE 4 CH UHF TRANSMITTER AND RECEIVER KITS For more details on this kit look for the kit review in the last issue of Silicon Chip. Kits inc. PCB, UHF module and all onboard components.
Transmitter K190A $22.
Receiver K190B $32.

SPECIAL INTRO PRICE $33 each
For much more information simply search the net for NRF-401
Also see our web site

www.oatleyelectronics.com Suppliers of kits and surplus electronics to hobbyists, experimenters, industry & professionals.
OR www.oatley.com Orders: Ph (02) 9584 3563, Fax 9584 3561, sales@oatleyelectronics.com, PO Box 89 Oatley NSW 2223
major credit cards accepted, Post & Pack typically $7 Prices subject to change without notice ACN 068 740 081 ABN18068 740 081

'Stringing' Along With The PICAXE

by Stan Swan

Would you believe this month we are going to use a piece of wet string for data communication between two PICAXE-08s? Or even a ring of kids holding hands? And we might even try adding radio! Read on – and be amazed . . .

The so-far-unused Pin 0, normally switchable as either the programming input or an output pin, has revealed itself capable of versatile double duty.

When a high impedance piezo sounder was connected to this pin, it was found that programming downloads to the "08" would still pass as normal, with the piezo also conveniently "burbling" as the program went past.

Not only is this a useful audible assurance, (unless you're working late at night!), but the piezo remains capable of sound output as desired, *without* having to swap the I/O leads. Consequently it's recommended that sound outputs be now normally generated at Pin 0, since this conveniently frees up other I/O pins for more demanding work

Sounds, LED flashing, A-D conversion, timing, pulsing, and motor control all for under $5! As if their appeal so far wasn't enough, PICAXE-08's also come with full-featured serial data communications capabilities.

Sacre bleu – it's almost like learning your kids are talented at cricket, calculus *and* cooking!

As we have discovered over the past few months, these little "kids" are extremely talented. Unlike kids, though, they are very cheap to train and use. Not only that, they don't know the difference between work and play!

But, at 2400 bps, it's not very fast – OK, maybe your kids aren't that hot tidying up their bedrooms either? However such data speeds are more than enough for digital data control over simple wired links and show merit for short range wireless control and telemetry too.

Even when wound back to 300 bits per second (perhaps for reliability), valuable data acquisition of temperatures/security/voltages/control signals and the like can occur. Such variables may only need updating every few seconds (even hours?) – it's not as if you're downloading MP3s from the web at ADSL speeds!

In today's wide-bandwidth data communications age, when Firewire, Wi-Fi, Bluetooth, ADSL and even regular USB entrance us with speed and seamless connectivity, plain RS-232 may seem as quaint as Morse code.

Yet **R**ecommended **S**tandard **#232**, dating from 1960s room-filling computers, still remains the core tech-

How long is a piece of (wet) string? Long enough to transmit and receive data communications from one PICAXE to another. Fair dinkum – wet string really does work!

nique for linking diverse electronic communications and terminal equipment, especially when raw speed is not an issue.

Modems, navigational aids, data loggers, CNC milling machines, programmable devices, instruments and the like often still depend on inter-device protocols detailing speeds, bits per character, stop and parity.

Such well known cryptic expressions as 9600E71 (9600 bps, Even Parity, 7 bits per character, 1 Stop bit) inform both ends of a serial comms link of the protocols expected, much as sports teams must follow prescribed rules. (If one team plays basketball while the other plays soccer then of course little sense will occur).

RS-232 voltages should strictly be ±15V, with "1" being negative and "0" positive. These wide swings may have to be provided by the ubiquitous MAX232 IC, as was the case in one of the PICAXE applications shown last month.

However, the PICAXE swing of 5V is usually sufficient. Classic serial D9/25 data cables may use diverse data flow control voltages, presented over extra wires at RTS (Ready To Send), CTS (Clear To Send), DTR (Data Terminal Ready).

Phew, rest easy ladies and gentleman – FWR on these (Finished With Engines?) – bare bones data links can be done over just a 2 wire connection (signal line and ground return).

In fact "08"s have shown themselves to have such robust input features that almost *any* electrical 2-wire link could be viable, with the theoretical "50 foot" (~15m) serial cable limit trivial.

Junk box wires, 100 metre lengths of twin core bell wire, capacitors, or even (wait for it!) damp natural string (!) have all delivered the data for me. The upper wired link impedance is thought to be some 1MΩ, which roughly approximates the resistance of dry skin.

Ever conscious of electrical safety with impressionable youngsters and with adult "terminals" at each end, I've even had a chain of young kids holding hands passing RS232 data, (perhaps the kids had palms damp with the excitement!).

Quick DMM soil conductivity tests here in coastal New Zealand, showed some 10kΩ resistance with a ten metre probe separation, implying a sin-

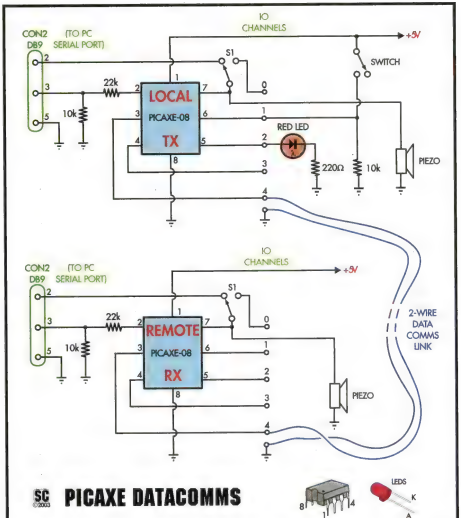

SC PICAXE DATACOMMS

Yes, our "standard" PICAXE circuit has changed this month – and not only 'cos there's two of 'em! We're also permanently connecting the piezo to I/O port 0 (pin 7). Why? Because we can!

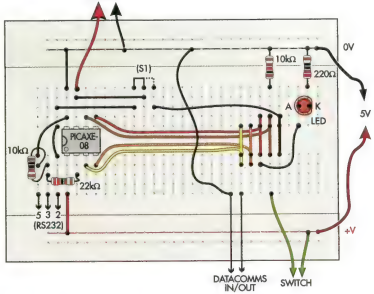

Here's the protoboard wiring for the transmitter shown above. The receiver is basically indentical but does not have the LED, switch nor associated resistors.

BASIC PROGRAM LISTINGS

(This can also be downloaded from http://picaxe.orcon.net.nz)

RX.BAS

```
'PICAXE-08 serial INPUT data control link for July 2003 SiChip article  V 1.0 15/5/03
'Needs matching output program & hardware at sender PICAXE for receiver piezo control
'Connect piezo to PICAXE-08 pin 0 - ref article for use as programming feedback too.
'2 wires between units only - data on pin 4 linking both & simple ground return
'Inputs such high impedance that even damp string (~ 1MOhm) may be used as conductor!
'Variable b0= sender switch status (0=off/low,1=on/high) with 10k pulldown resistor
'NB -serial link decoding overheads may mean time delays (?)-easily "pause" tweaked.
'Via Stan. SWAN (MU@W,New Zealand)  => s.t.swan@massey.ac.nz <=
'-------------------------------------------------------------------------------
' Lines beginning ' are program documentation & may be ignored if need be.
' Program available for web download =>www.picaxe.orcon.net.nz/rx.bas
'-------------------------------------------------------------------------------
state:                  ' procedure to serial data read sender switch state
 serin 4,n2400,b0       ' set up serial input on pin 4 & wait for b0 value
if b0 =1 then fastbeep  ' check b0 & jump to fastbeep if =1(ON) else continue

slowbeep:               ' slow beep routine when switch is low (OFF)
 sound 0,(80,20)        ' 20 ms lazy beep to piezo attached direct to pin 0
 pause 1000             ' 1 sec delay (may need altering to synch. ?)
goto state              ' return to serial link switch reading input

fastbeep:               ' fast beep routine when switch is high (ON)
 sound 0,(100,10)       ' 10 ms higher pitched urgent beep to pin 0 piezo
 pause 250              ' 1/4 sec delay ( may also need altering ?)
goto state              ' return to serial link switch reading input
```

TX.BAS

```
'PICAXE-08 serial OUTPUT data control link for July 2003 SiChip article. V 1.0  15/5/03
'Needs matching input program & PICAXE hardware at receiver unit for sender control
'Connect status check LED via 220 Ohm dropper R & toggle switch Pin 0 with pulldown R
'Simple 2 wire data link can be greatly extended or even replaced with damp string !
'Variable b0= switch status ( 0=off/low, 1=on/high ) with 10k pulldown resistor
'Pause times at sender may need tweaking to synch. with receiver - decoding o'heads ?
'Via Stan.SWAN (MU@W, New Zealand) => s.t.swan@massey.ac.nz <=
'-------------------------------------------------------------------------------
'Lines beginning ' are program comments etc & may be ignored if need be
'Program available for web download => www.picaxe.orcon.net.nz/tx.bas
'-------------------------------------------------------------------------------

state:                  ' procedure to serial data send local switch status
 serout 4,n2400,(b0)    ' setup & 2400bps send b0 value as serial output pin 4
if pin1=1 then fastbeep ' if local switch is on/high jump to fastbeep

slowbeep:               ' lazy slowbeep if switch is off (0)
 b0=0                   ' set switch status variable b0=0
 pulsout 2, 5000        ' pulse attached LED at pin 2 for local confirmation
 pause 2000             ' 2 sec. delay (may need altering for synch ?)
goto state              ' loop back to switch status routine

fastbeep:               ' fastbeep urgent routine if switch is on (1)
 b0=1                   ' assign switch status variable b0=1
 pulsout 2,5000         ' pulse attached LED at pin 2 for local confirmation
 pause 500              ' 1/2 sec. delay (may also need altering for synch ?)
goto state              ' loop back to switch reading routine
```

gle wire earth return (SWER) data link could be viable; perhaps over many kilometres to suit moist region farms (***unused*** electric fences perhaps?)

What I am trying to say here is that just about anything conductive but safe is worth a try. How about a water-filled plastic hose, with connections to the brass fittings? NB: 240V mains wiring is of course so unsafe when meddled with that it should never even be considered!

You won't do any harm and you may be surprised at what you can get away with!

Syntax:

Bit rates can be 300, 600, 1200 or 2400 bps, true (T) or inverted (N). Picaxe serial commands are capable of sophisticated data qualification too, needed perhaps for LCD driving. At a basic level, suitable for this month's article, the syntax is just -

Serial output:

output pin, T/N & bit rate, (data,data,...)

Example: serout 2,N2400,(b1)

This sends variable b1 (and others?) through pin 2 at 2400bps, inverted polarity

Serial input:

input pin, T/N & bit rate, data, data,...

Example: serin 4,T300,b2

This receives one byte of data (true polarity, 300bps) at pin 4 and stores the data as variable b2. Incidentally, the program stops and waits until this prescribed data is received.

An important further aspect of serial reception, only *too* well known in classic comms. theory (recall buffered 16550 UARTs?), is that data may be missed or jumbled if the busy receiver is "distracted" with another task or program loop.

Wireless data receivers may also need a few milliseconds (typically 5) turn-on time as well. Sender delays, "wake up" junk variables, sync bytes (with predetermined data), reduced data rates or even refined recipient program routines may be needed to cope. Mmm– does it all seem *very* like your kids on reluctant kitchen duty again?

The program(s):

Since two "08s" are used, it'll help if two PCs are available for independent editing. One will of course suffice (using minimised screens) but you'll need a clear head to avoid confusing

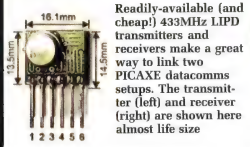

Readily-available (and cheap!) 433MHz LIPD transmitters and receivers make a great way to link two PICAXE datacomms setups. The transmitter (left) and receiver (right) are shown here almost life size

the programs, cables and controllers!

It'll also help if you use consistent titles – local/sender/transmitter/tx/A and remote/recipient/receiver/rx/B perhaps ?

The setup here uses a simple switch, whose status is shown also by a local LED flash, to control remote speaker beep rates and tones. When on, this switch just connects the positive rail (~5V) to input pin 1, which then reads a "1" to the program.

At switch off (read as 0), this then unconnected pin 1 may randomly "float" between 0-1 values, since it's not strictly connected to anything.

A high value "pull down" resistor (~10kΩ) solves this by providing a weak but firm connection to the ground rail. The opposite effect may be organised, if needed, with a similar "pull up" resistor to the positive supply.

Flicking the switch on just instructs the remote PICAXE to sound its piezo more urgently and at a higher tone. Pauses at each end can easily be adjusted (ex. pause 500 = ½ sec delay) to give LED & sounder synching.

Of course a further data link could have been added, perhaps for the remote to "handshake" signal back to the local unit about its state and thus regulate and control the data flow.

Just a one way (simplex) wiring has been set up initially to help avoid your possible "which is which" confusion and allow minimalist (wired) links.

Wireless linking

An appealing extension of this circuit uses prebuilt hybrid 433.29MHz UHF radio control modules at each end. These quite cheap and readily-available devices were apparently developed for licence-free radio controlled garage door opening, with SMD circuitry on the SAW transmitter (Surface Acoustic Wave – a kind of enhanced piezo oscillator) small enough to fit in a key-chain and generate a few millwatts, even with a near flat (2-12V) battery.

And here's the proof of the pudding. OK, so here it's only over a few centimetres but it could be many hundreds of metres with suitable antennas. The scanner at rear is simply monitoring the 433.29MHz data stream.

In Australia and New Zealand
TAKE YOUR PIC:
Picaxe.com.au
MicroZed.com.au
PHONE (02) 6772 2777 9-5
FAX (02) 6772 8987 24 Hours
There is more to PICAXE than just the chips. MicroZed have the whole lot on their shelves

45 PICAXE ITEMS

ON OUR SHELVES, WITH MORE COMING

IN AUSTRALIA: altronics.com.au
IN NEW ZEALAND: sicom.co.nz
and for chips in Australia:
catleyelectronics.com

The sensitive receiver is slightly larger, and needs a steadier supply (4.5V-5.5V) – it'd normally be indoors of course supplied from the mains via a plugpack and 7805 perhaps. They often pair with Holtek encoder/decoder ICs but seem almost made for wireless Picaxe linking, since their convenient "serial data in" (Tx) and "serial data out" (Rx) pins almost beg for action!

PICNIK protoboard construction proved simple, with supply wiring and data pins a breeze to connect. The only code changes related to data rates being lowered to 300 and made true (T) – N did not turn on the transmitter. Pins on each module allow a 50Ω antenna too, perhaps resonant quarter-wave uprights (~175mm wire slightly coiled for compactness).

To help initial set up a scanner or other radio receiver capable of covering 433.29MHz may greatly assist - you'll hear a scratchy ASK (Amplitude Shift Keying) wideband signal as the data goes out.

Naturally range was of keen interest and even with the simple antenna strong line-of-sight signals were de-

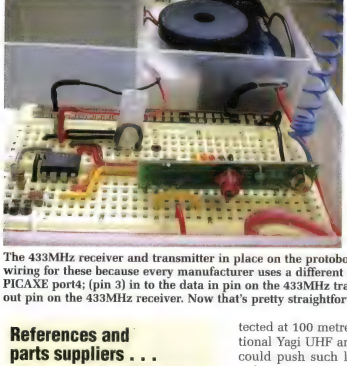

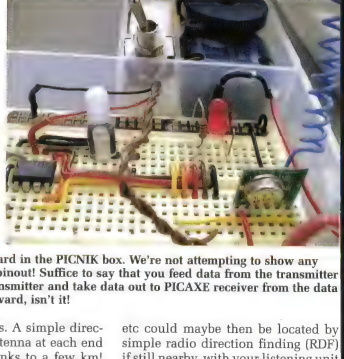

The 433MHz receiver and transmitter in place on the protoboard in the PICNIK box. We're not attempting to show any wiring for these because every manufacturer uses a different pinout! Suffice to say that you feed data from the transmitter PICAXE port4; (pin 3) in to the data in pin on the 433MHz transmitter and take data out to PICAXE receiver from the data out pin on the 433MHz receiver. Now that's pretty straightforward, isn't it!

References and parts suppliers . . .

(also refer to previous months articles)

1. Many web sites have valuable insights into the last 200 years (semaphore to cellular!) of data communication techniques and "brick walls ". The lucid " Brief History of Datacomms."–**www.k12.hi.us/~telecom/datahistory.html** is typical.

2. Wireless data modules from Computronics, WA (type TWS/RWS) **www.computronics.com.au** or Commlinx, Tas (type TLP/RLP) **www.commlinx.com.au** ~A$8 each, but pinouts may vary.

3. Tx/Rx module datasheets via Reynolds Electronics (Rentron USA) **www.rentron.com**, or Laipac Technology (Canada) - **www.laipac.com**

4. Oatley Electronics (NSW)- **www.oatleyelectronics.com** sell more sophisticated UHF data units (ref. June 2003 Silicon Chip article), as do Chipcon – **www.chipcon.com**

5. LIPD (Low Interference Potential Device) regulations - **www.aca.gov.au**

7. Author's ever-updating "08" web page – **www.picaxe.orcon.net.nz**, shows simple 433MHz antenna suitable longer range DIY wireless data links.

tected at 100 metres. A simple directional Yagi UHF antenna at each end could push such links to a few km! Indoor ranges of some 30m, influenced of course by building materials (especially reinforced concrete), would normally nicely cover a suburban property (and maybe next door, although that is probably not legal).

Receiver "settling" time, as outlined earlier, proved an issue however. Data often was missed by the receiver busy on task execution, and considerable preamble "massaging", perhaps by longer gaps between data (200mS ?) or pull up resistors may be needed for links as reliable as the wired ones.

It's recommended that you wrestle with these tweaks yourself, since PICAXE workarounds are so easy to cut and try that you may be rewarded with immense insights into such classic datacomms frustrations as noise and receiver overload.

A possible application, with PICAXE-08s at both ends, relates to "keeping your dog in the yard".

A small transmitting collar module could wake up (via the "sleep" command) and send a data pulse every 5 seconds or so to the nearby receiver. Decoding software, suitably set up to remain silent when pulses were correctly received, would sound an alert only when this pulse train was absent, presumably because the sender had "jumped the fence" and moved out of range.

Visions of lively beeps signalling "Fido's out again" of course arise! Such wandering animals, vehicles, or bags etc could maybe then be located by simple radio direction finding (RDF) if still nearby, with your listening unit then switched to a "find Fido" mode.

Several coded senders could even be monitored and identified by just a single receiver – coloured winking LEDs or varying tone/duration beeps would give specific ID.

Such "fail safe" circuits have wide application but the opposite function offers productivity too.

Aside from short range emergency location (avalanche rescue perhaps?), consider an approaching bus fitted with a data sender, coded for perhaps the route number, so that a suitable alert is triggered as the bus drew closer to the stop.

Intending passengers could then be ready to board before the bus drew up, with obvious time saving benefits all round- it may also encourage public transport use.

Even your mum's handbag might get fitted with such a sender, so as to alert "Yikes – mum's almost home – tidy up the kitchen fast " as she approaches! Stay tuned. **SC**

NEXT MONTH:

Memory, LCD driving and program economising

You think that by now we'd be done,
With "08s" exhausting their fun,
But the darlings of course,
Still have to do Morse!,
Before their big brothers can run

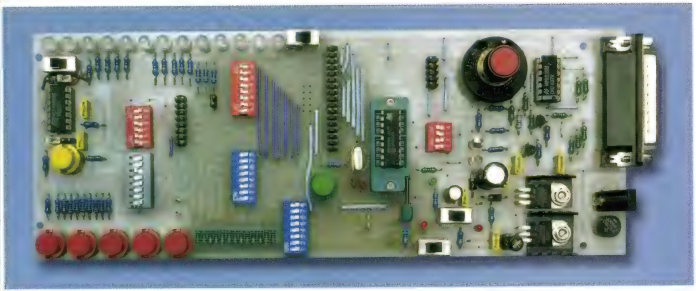

Updating the PIC Programmer & Checkerboard

The PIC programming software described in the March 2001 article for the PIC Programmer & Checkerboard is not suitable for use with Windows 2000 or XP. Some constructors have also experienced problems with newer (1GHz+) PCs. Here's how to resolve the problems.

By PETER SMITH

TO RESOLVE THE VARIOUS issues, it is necessary to switch to more up-to-date programming software. As presented, the hardware is compatible with the original "Tait Parallel PIC Programmer". Various software packages that support this type of programmer are freely available on the Internet.

Using IC-Prog

We suggest "IC-Prog", as it is well-supported and free for personal use. You can obtain the latest version of IC-Prog from **www.ic-prog.com**. In all, you'll need to download three files: the application (icprog105a.zip), the driver for Windows NT/2000/XP (icprog_driver.zip) and the help file (icprog.chm).

Note that the filenames will change over time as IC-Prog is improved and updated.

Unlike most Windows applications, IC-Prog is not self-installing, so you'll need to manually create a folder to contain the files. We named ours "C:\IC-Prog". It's then just a matter of unzipping the first two files into the new directory and creating a shortcut on your desktop (or start menu) to "icprog.exe".

The help file (icprog.chm) should also be saved in this new folder.

Installing the port driver

For Windows NT/2000/XP users, the serial/parallel port driver should be installed as the next step.

Launch IC-Prog (ignore any error messages) and from the main menu select ***Settings -> Options*** (see Fig.2). Click on the *Misc* tab and from the list of displayed options, click on the "Enable NT/2000/XP Driver" check box (do not change any other settings on this tab!). Follow the prompts to restart your machine so that the driver can be installed and started.

Note: if the port driver is not properly installed, you will get a "Privileged Instruction" error whenever IC-

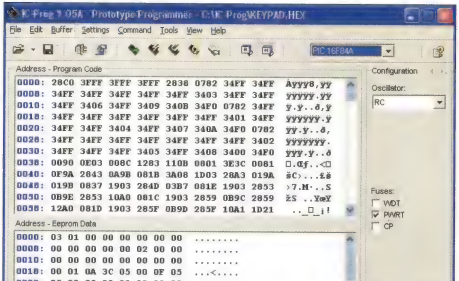

Fig.1: this is the main IC-Prog window. This easy-to-use package programs PICs reliably and it's free!

Prog attempts to access the parallel port.

Setting up IC-Prog

Before use, IC-Prog must be set up to suit the programming hardware. From the main menu, select ***Settings -> Hardware*** to bring up the "Hardware Settings" dialog (Fig.3). Choose "Pro Pic 2 Programmer" as the programmer type and "Direct I/O" as the interface method.

Next, check the "Invert MCLR" and "Invert VCC" boxes (do not check any of the other "invert signal" options!). You should also select the LPT port that you'll be using with the programmer.

No other settings in this dialog should be changed.

Using PICALLW

A few constructors have asked if PICALLW can be used with the programmer. We've checked it out and it appears to work fine but note that, at the time of writing, there are some documented problems when installing it on Windows NT/2000/XP machines.

You can download PICALLW from **www.picallw.com**. Unzip the downloaded file into a temporary folder and double-click on the setup file to launch the installation

Depending on the version of the software, you may also need to install a separate port driver for Windows NT/2000/XP. Refer to the release notes on the website for details.

Once the installation completes, launch PICALLW from the start menu and configure it for the "P16PRO" type programmer (Fig.4).

Next, from the main ***Settings*** menu choose ***Hardware Setup***/Test to bring up the dialog shown in Fig.5. This menu allows you to select the parallel port lines that control the various programmer signals, as well as their polarities. Simply click on the "P16PRO 74LS07" button and the software will set everything correctly. Click on OK to close the window. That's it!

General information

Both of the programming packages described above support a variety of different PICs and serial-programmed EEPROMs. However, the programming hardware can only be used with the PIC16C84 and PIC16F84(A) devices. Be sure to select the correct type of

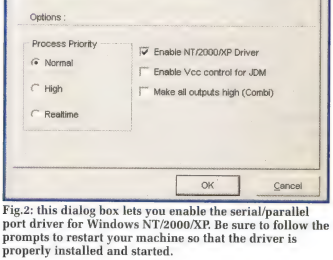

Fig.2: this dialog box lets you enable the serial/parallel port driver for Windows NT/2000/XP. Be sure to follow the prompts to restart your machine so that the driver is properly installed and started.

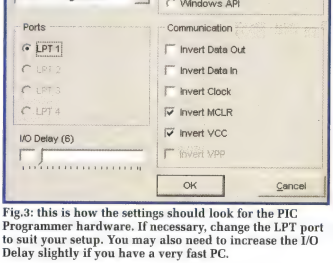

Fig.3: this is how the settings should look for the PIC Programmer hardware. If necessary, change the LPT port to suit your setup. You may also need to increase the I/O Delay slightly if you have a very fast PC.

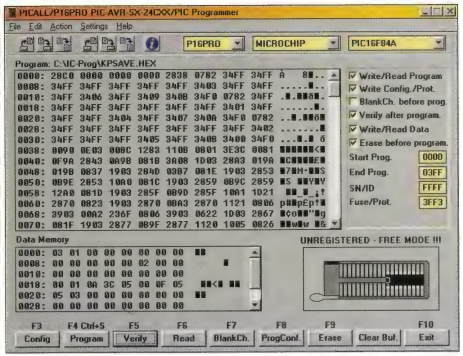

Fig.4: the main PICALLW window. Select "P16PRO" from the drop-down list for compatibility with the PIC Programmer hardware. The software usually detects the correct LPT port automatically but if necessary, it can be changed manually via the "Settings" menu.

PIC from the drop-down list in the main window at the start of your programming sessions.

Note: it is not a good idea to have more than one programming package installed on your system at any one time. Make sure that you have completely removed one package (including the port driver) before installing another.

Errata

Finally, constructors of this project should note the following errata (some of these corrections have been published before and are also included here for the sake of convenience):

(1). On the PC board, there is insufficient space to fit the 2200µF 25V filter capacitor but a value of 1000µF 25V will be adequate.

(2). The schematic diagram on pages 64 & 65 (March 2001) has the following errors:

(a) contact 7 of DIPSW5 and DIPSW6 should connect to the RUN contact of S3a (the connection at CON3 is correct);

(b) Contact 8 of DIPSW5 and DIPSW6 should connect to the RUN contact of S3b (the connection at CON3 is correct).

(c) The sections of IC1 are shown as inverters. IC1 is in fact a 7407 non-inverting hex buffer.

The PC board and component overlay on page 67 are correct.

(3). On the Liquid Crystal Display Veroboard, add a 4.7kΩ resistor so that it is connected between pins 2 & 6 of the display. (ie, effectively connected as a pull-up resistor between RA4 of the PIC and +5V).

(4). Substitute the paragraph on page 69 (third column) which starts "The RA4 input on the micro . . . " with the following text: "Close pole 5 of DIPSW2, situated at the top centre of the PIC Programmer board. This action uses the associated 10kΩ resistor as a pull-up resistor for bit RA1 of the PIC micro, which is ultimately pulled low by the operation of the switch (S6) to start the chase sequence".

Also, the text on page 69 (third column) refers to jumper J2 and switches SW3 and SW4. These should be JP2, S11 and S12, respectively. The circuit diagram and overlay are correct.

(5). The specified minimum DC input of 15V is too low to accommodate the worst-case voltage drops across the diode bridge (DB1) and the 12V regulator (REG1). For reliable operation, the minimum input voltage should be 17V.

12VAC plugpacks will probably meet the minimum voltage after rectification but note that this will vary model to model. To check if your plugpack (either AC or DC) has sufficient output, apply power to the circuit and measure the voltage between the output of REG1 and ground. The reading should be close to 13.2V.

(6). The programming voltage (VPP) applied to the MCLR pin of the PIC is divided down by a 100Ω series resistor and two 470Ω resistors to ground. This reduces the VPP voltage to below the minimum required for PIC16-F84(A) micros and may result in unreliable programming. To correct this problem, replace one of the 470Ω resistors with a 4.7kΩ resistor.

(7). Some early kits were provided with a female 25-pin 'D' connector together with a gender changer. This arrangement will not work because it crosses over several connections. As specified in the parts list, CON2 must be a male type.

For connection to your computer, use a short, good-quality (shielded) parallel printer extension cable. **SC**

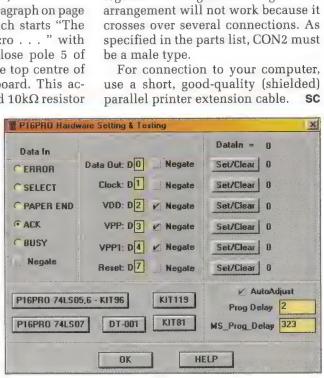

Fig.5: all you need to do to here is click on the "P16PRO 74LS07" button and PICALLW will set the correct options for the PIC Programmer. You may need to increase the "Prog Delay" value slightly if you have a very fast PC.

VINTAGE RADIO

By RODNEY CHAMPNESS, VK3UG

The "Jelly Mould" STC 205 Mantel/Table Receiver

The 1948 STC 205 dual-wave receiver was a rather unusual set, especially when it came to cabinet design. In addition, there were some rather unusual circuit "quirks" in what was otherwise a fairly conventional 5-valve superhet.

At first glance, the STC 205 doesn't appear to be really any different from a hundred other 5-valve dual-wave receivers, circa 1948. But it is different – the cabinet slips over the top of the set like a tea-cosy does over a teapot. In fact, the cabinet style reminds many people of a jelly mould, hence the nickname given to the set.

The dial-scale is at the top of the set and is angled at about 45°. This fact, coupled with the overall styling of the cabinet, makes it difficult to decide whether the set is intended as a table or mantel set – or is intended to be both. Certainly, it would not look out of place on a table as the cabinet style is almost the same front and back. It does, however, have a cutout in the back of the cabinet near the top, which acts as a carrying handle.

The STC 205 featured an angled dial-scale and an unusual cabinet that slid over the chassis from the top.

This seems to suggest that it is primarily intended as a table set. However, it is small enough and slim enough to sit happily on a mantelpiece, although viewing the dial-scale wouldn't be all that easy.

As shown in the photos, the STC 205 has four control knobs and these are located on either side of the cabinet. Each of these is slid onto the shaft and held in place using a machine screw which goes through the centre of the knob and into the end of the control shaft. I am not aware of any other domestic receivers that use this method of securing the control knobs.

An unloved STC 205

My STC 205 receiver was obtained in fair condition only and needed quite a lot of work to restore it to working order. The cabinet was very dull and scruffy, the dial-scale cover and the cardboard chassis cover were missing, the power lead had been "repaired" with tape and one knob was missing. Fortunately, mice had not been in residence but the chassis was corroded and was covered in dirt, cobwebs and other debris from storage in a less than ideal environment.

The chassis isn't all that hard to get out of its cabinet, although the procedure is somewhat different to normal. First, the four knobs are removed by undoing the screws that go into the

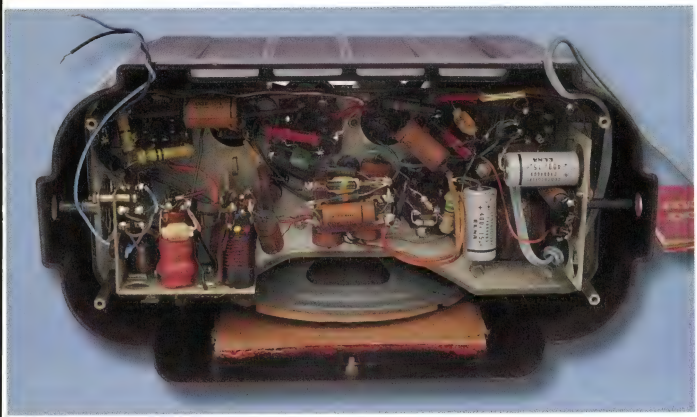

This view shows the bottom of the set with the cardboard cover removed. Access to the various components is quite good, although the cabinet has to be removed to allow access to the valves which are on the top of the chassis.

control shafts, then sliding the knobs off (see photo). That done, you have to undo the four screws through the rubber buffers on the base of the set, after which the buffers and the cardboard bottom plate are removed.

The final step is to undo the four pillars that hold the chassis to the cabinet. Once this has been done, it's simply a matter of lifting the cabinet off the chassis.

From the photographs, it can be seen that the chassis is well-populated with components and there is not much spare space. Despite this, access to the various components and to the valves is quite easy.

Cleaning up the mess

The speaker cloth was dirty, so it was removed and washed in soapy water. It was then thoroughly rinsed, stretched slightly and laid to dry (the cloth tends to shrink a little as it dries). Similarly, the cabinet and knobs were given a complete clean in the laundry tub using detergent, warm water and a good scrub with a nail brush.

Once clean and dry, the cabinet and knobs were given a cut and polish using car polish, which restored the original sparkle. That done, the speaker cloth was replaced and glued in position using contact adhesive.

As mentioned earlier, the clear celluloid dial-scale cover was missing. This was replaced with a cover cut from a clear shirt-box lid and glued into place using epoxy adhesive.

The next job involved cleaning the chassis and this was mainly achieved using a kitchen scouring pad dampened with household kerosene. However, there are many awkward nooks and crannies on the chassis which made this job difficult and the end result was only satisfactory – it certainly doesn't have a pristine, "just-out-of-the-factory" look.

If necessary, the pad can be cut up and pushed into awkward spots with a screwdriver and moved around. This helps to get most of the gunk off the chassis and components and I've found that kerosene-dampened scouring pads are quite effective for this job. It's not a good idea to use steel wool, as small slivers of steel can end up in the chassis where you don't want them and cause shorts and possible damage to the set.

Anyway, although not perfect, the end result was quite presentable. As a final touch-up, the dial pointer was painted white, as it had discoloured over the years.

Overhauling the circuitry

The set also had a few electrical problems. First, the power lead was replaced with a fresh twin figure-8 lead and because the set doesn't have an on-off switch, an in-line mains switch was fitted. Today, I would be inclined to fit a 3-core power lead for extra safety.

The valves were all cleaned using

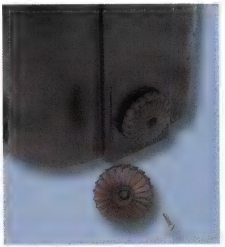

Each knob is secured using a screw which passes through the centre and into the end of the control shaft.

This rear-view of the chassis show just how easy it is to access the valves once the cabinet has been lifted off.

soapy water. This was done by holding the valves upside down and only washing the glass envelopes, to keep moisture from getting into the base. It's also important not to wash any printing off the glass envelopes (eg, the type number) during this process.

A lead on the loudspeaker transformer was found to have a dry joint and this lead fell off as soon as it was touched. I wonder how many strange effects occurred over the years because of this bad solder joint? The speaker transformer had never been replaced, so it was not a "new" problem.

Next, the two high-tension (HT) electrolytics were replaced and an audio bypass capacitor (C14) – omitted at the time of manufacture – was added. As a result, with both the dry joint resoldered and the missing capacitor fitted, this is one set that undoubtedly now performs better than brand new.

The bottom of the receiver is fitted with a cardboard cover and a sticker that shows the valve layout.

There were a few other problems as well. Resistor R13 had gone open circuit while R15 had gone high in value, so both were replaced. These defective resistors would have reduced the bias on the 6V6GT audio output valve to zero if the set had been turned on. As a result, the 6V6GT would have drawn excessive current if this fault was still present and this may have destroyed the valve.

From this, it can be seen that it's important to track down and correct as many faults as possible before deciding to "give 'er a go". Faults like those described above, plus leaky coupling capacitors and open-circuit loudspeaker transformers, can create havoc if not corrected before the set is switched on.

Four paper capacitors were also found to be leaky and these were replaced. These included two HT bypasses (C13 and C17), the AGC capacitor (C7) and the audio coupler (C22). In addition, several perished grommets were replaced, a new longer antenna lead was fitted, a dial lamp was replaced and a dry joint at the lamp socket was resoldered.

That done, the valves were refitted to the set so that it could be tested. First, however, I set my multimeter to a range greater than the expected HT voltage (around 250V) and connected it between the output of the 6X5GT rectifier and chassis. The set was then switched on and the HT voltage checked. As expected, it was around 250V with the new electrolytic capacitors.

Note that if the 6X5-GT rectifier had been low in emission, the HT voltage may have been quite a bit lower.

Anyway, the set did work but the IF stage was unstable and the earthing of the valve shield around the 6U7G was poor. Fixing this problem involved further cleaning of the chassis around the base of this valve, to make sure that the shield was properly earthed. This eliminated the problem at the time but the performance of this stage deteriorated later on and a fresh 6U7G had to be substituted to eliminate the whistles and crackles that had developed.

Alignment

Alignment of the STC 205 receiver was quite straightforward. First, a digital multimeter – set to the 0-20V DC

Watch Out For Asbestos In Vintage Radios

Over the last few years, there has been considerable publicity about the dangers of contracting cancer and other nasty diseases due to contact with asbestos. As such, readers should be aware that some old radio receivers included sheets of asbestos, usually fitted close to valves to prevent damage to heat heat-sensitive components and to the cabinet.

Any receivers with asbestos in them should be treated with extreme caution. Do not work on such sets until you have sought expert advice as how to the asbestos can be safely removed or stabilised within the set.

range – was connected across R9. With the tuning gang closed, the set was then switched to the broadcast band and a signal generator – set at 455kHz with tone modulation – connected to the aerial and earth terminals of the receiver.

The signal generator output was then increased and the output frequency varied slightly to see if the intermediate frequency (IF) was exactly 455kHz. In this case, it was close enough. The IF transformer slugs were then adjusted for maximum reading on the multimeter, the signal generator output being continuously reduced as each section was aligned.

If you don't have a signal generator, the procedure is to tune to a local station and vary the size of the antenna until the signal into the set is strong enough to give a reading on the multimeter. The set doesn't have to be exactly on 455 kHz – it's just a matter of adjusting the IF stages for best performance.

Next, the oscillator coil core (slug) is adjusted so that a station at the low-frequency end of the broadcast band (ie, around 600kHz) appears at its correct location on the dial. The aerial/antenna coil is then adjusted at around the same spot on the dial.

That done, you simply tune to around 1500kHz and adjust the oscillator trimmer capacitor (if necessary) so that a known station appears at its correct dial location. The aerial trimmer is then adjusted for best performance at the same frequency.

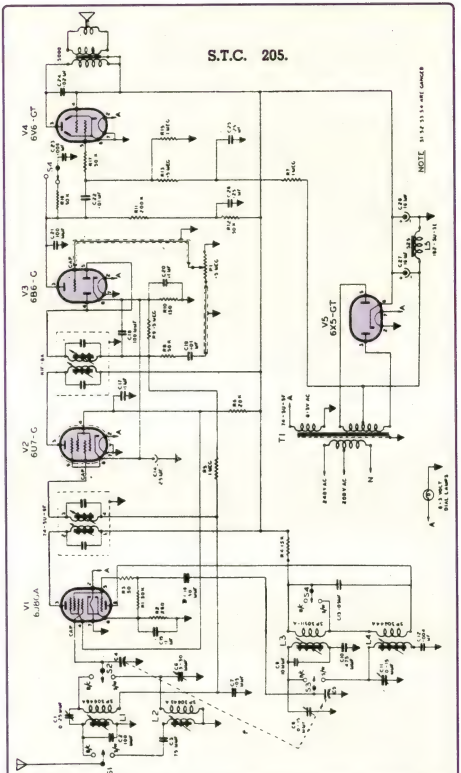

Fig.1: the STC 205 is a fairly conventional 5-valve dual-wave receiver with a couple of unusual features.

These adjustments interact to some extent, so it's a matter of repeating these adjustments at both ends of the dial until no further improvements can be obtained.

By the way, the trimmers in this model are made out of short lengths of thick enamelled wire (about 30mm long), each of which has several turns of tinned copper wire wound onto it.

This view shows the chassis from the front. The angled dial-scale is mounted on an L-shaped bracket which is supported on the chassis base using a couple of metal pillars.

The actual capacitance is varied by altering the amount of tinned wire over the enamelled wire. If you take too much off, you will have to solder more thin tinned copper wire onto the end of the original winding.

This can be a messy business and so most people tend to leave such trimmers well alone. If the set does not appear to be down in performance, I'd also be inclined to leave them as they are rather than risk it.

The shortwave band is aligned in the same way as the broadcast band except that the frequencies are higher. The low-frequency end should be aligned at about 7MHz and the high end at around 16MHz.

Note that on shortwave, problems can arise with image reception and this can upset the alignment. For more detailed alignment procedures, readers should refer to my article in the February 2003 issue.

A walk-through the circuit

Fig.1 shows the circuit details of the STC 205. The first thing to note is that the antenna tuned circuits are a little different to other receivers. For starters, the broadcast-band antenna coil's primary resonates below the broadcast band and this gives improved performance at the low-frequency end of the dial.

In addition, trimmer C1 (for the high-frequency end of the dial) is wired across the tops of the two windings in the antenna coil. This boosts the coupling from the antenna to the tuned circuit, although it is unusual to have the trimmer in this position. Most sets have this trimmer going from the grid of the RF valve to chassis.

By contrast, the shortwave coil has a capacitor (C3) in series with its primary winding. A capacitor placed in this position has the effect of electrically shortening the antenna and perhaps this was the intent. Using an "average" antenna of around 6-7 metres, the antenna system would resonate somewhere near the high end of the shortwave band.

By the way, if you look carefully at the two antenna coils you will see a drafting error – both coils show the coil adjustment in the untuned winding! Someone didn't spot this when checking the circuit diagram.

The oscillator circuit is conventional but there is a right royal blunder in this circuit too! C13, which has a value of 50nF (0.05µF), is shown wired across the feedback windings of both oscillator coils. However, if this had really been done, the oscillator would have no feedback due to the heavy damping of the winding by the capacitor. The bottom end of C13 should in fact go to earth.

The IF stage is conventional and uses a 6U7G followed by a 6B6G as a combined detector, simple AGC and first audio stage. The 6U7G and the 6B6G share a common cathode bias resistor and common bypass capacitors. This is unusual, as the 6U7G will draw less current as the AGC voltage increases which will mean that the voltage across R10 will also drop. This in turn will reduce the bias on the 6B6G and alter its operating conditions.

It's a strange design quirk that appears to have no redeeming features.

The audio output stage is also quite conventional and uses a 6V6GT audio output valve. However, I find it puzzling that cathode bias is not used in this stage, as all other stages of the receiver use this method. It would also have been quite practical to use back bias on all stages instead of just the 6V6GT stage.

As with a great deal of other STC equipment, the filter choke is in the negative power supply lead. This reduces the voltage stress between the

Silicon Chip Binders

REAL VALUE AT $12.95 PLUS P&P

- ★ Heavy board covers with mottled dark green vinyl covering
- ★ Each binder holds up to 12 issues
- ★ SILICON CHIP logo printed in gold-coloured lettering on spine & cover

Price: $A12.95 plus $A5.50 p&p each (Australia only; not available elsewhere). Buy five and get them postage free.

Just fill in & mail the handy order form in this issue; or fax (02) 9979 6503; or ring (02) 9979 5644 & quote your credit card number.

Photo Gallery: Stromberg Carlson Model 496 Receiver

Manufactured by Stromberg Carlson (Sydney) in 1936, the Model 496 is a 4-valve superhet housed in a substantial wooden mantel cabinet.

The set used a mixture of valve types which required individual 4V, 5V and 6V heater windings on the transformer. The valve types used were: 6C6 (autodyne mixer), 6F7 (IF amplifier and detector), AL3 (audio output) and 80 (rectifier).

The high-gain AL3, with its 4V heater and "P" type base, was probably chosen to compensate for the lack of a separate audio preamplifier stage. It would have been one of the few high-gain output pentodes available at the time, with a "gm" nearly four times that of the more commonly-used type 42.

The same chassis was also used in the Model 436 console receiver. (Photo: Historical Radio Society of Australia, Inc).

choke frame and the winding. And as is common in other receivers of this vintage, there is no decoupling between the audio output plate circuit and the plate circuits of any other amplifying stages. As far as I am concerned, this is poor design and can lead to receiver instability.

Summary

Although this set has a number of less than perfect design features, its performance is quite satisfactory and it is quite a pleasant receiver to use. The performance is typical of other dual-wave 5-valve radios of the era. And although it has nothing at all to do with the operation of the set, the errors in the circuit diagram are annoying and indicate a lack of care in drafting and checking.

Did this apply to the on-line testing of individual receivers as well? Hopefully, the faults in mine were an isolated occurrence.

In summary, this STC receiver is quite different to many other sets, particularly when it comes to cabinet style. As such, it is a collectable item if only because of its unique style.

Errata

In February 2003, page 81, second column, the last two sentences in the last full paragraph should be corrected to read: "If it improves, more turns are needed and if it gets worse, either fewer turns are needed or the stage is accurately tuned. A brass slug (from an old volume control) inserted into the coil should give a slight increase in performance if the coil inductance is too high".

"If the performance deteriorates using either the ferrite or brass slugs, the tuned circuit is accurately tuned". **SC**

VALVES

AUDIO HI-FI
AMATEUR RADIO
GUITAR AMPS
INDUSTRIAL
VINTAGE RADIO

We can supply your valve needs, including high voltage capacitors, Hammond transformers, chassis, sockets and valve books.

WE BUY, SELL and TRADE

SSAE DL size for CATALOGUE

ELECTRONIC VALVE & TUBE COMPANY

PO Box 487 Drysdale, Vic 3222
76 Bluff Rd., St Leonards, 3223
Tel: (03) 5257 2297; Fax: (03) 5257 1773
Email: evatco@pacific.net.au
www.evatco.com.au

MEASURE RF VOLTAGES IN CIRCUIT

- 100kHz – 750MHz @ 10mV sens. (usable to 1.5GHz)
- Up to 70V RMS (100Vpk)
- Use with any standard DMM
- High tensile tip

Why spend $$$$ on a UHF CRO?

RFP5401A Designed & Made in Australia

RF Probes Pty Ltd
PO Box 6, Greensborough 3088
Phone:(03) 94321936 Fax:(03) 9444 7750
Email: admin@rfprobes.com.au
www.rfprobes.com.au

KALEX
PCB Makers!

• High Speed PCB Drills • 3M Scotchmark Laser Labels • PCB Material – Negative or Positive Acting • Light Boxes – Single or Double Sided; Large or Small • Etching Tanks – Bubble • Electronic Components and Equipment for TAFEs, Colleges and Schools • Prompt Delivery

We now stock Hawera Carbide Tool Bits

718 High Street Rd, Glen Waverley 3150
Ph (03) 9802 0788 FAX (03) 9802 0700

ALL MAJOR CREDIT CARDS ACCEPTED

Silicon Chip Back Issues

April 1989: Auxiliary Brake Light Flasher; What You Need to Know About Capacitors; 32-Band Graphic Equaliser, Pt.2.

May 1989: Build A Synthesised Tom-Tom; Biofeedback Monitor For Your PC; Simple Stub Filter For Suppressing TV Interference.

July 1989: Exhaust Gas Monitor; Experimental Mains Hum Sniffers; Compact Ultrasonic Car Alarm; The NSW 86 Class Electrics.

September 1989: 2-Chip Portable AM Stereo Radio Pt.1; High Or Low Fluid Level Detector; Studio Series 20-Band Stereo Equaliser; Pt.2.

October 1989: FM Radio Intercom For Motorbikes Pt.1; GaAsFet Preamplifier For Amateur TV; 2-Chip Portable AM Stereo Radio, Pt.2.

November 1989: Radfax Decoder For Your PC (Displays Fax, RTTY & Morse); FM Radio Intercom For Motorbikes, Pt.2; 2-Chip Portable AM Stereo Radio, Pt.3; Floopy Disk Drive Formats & Options.

January 1990: High Quality Sine/Square Oscillator; Service Tips For Your VCR; Active Antenna Kit; Designing UHF Transmitter Stages.

February 1990: A 16-Channel Mixing Desk; Build A High Quality Audio Oscillator, Pt.2; The Incredible Hot Canaries; Random Wire Antenna Tuner For 6 Metres; Phone Patch For Radio Amateurs, Pt.2.

March 1990: Delay Unit For Automatic Antennas; Workout Timer For Aerobics Classes; 16-Channel Mixing Desk, Pt.2; Using The UC3906 SLA Battery Charger IC.

April 1990: Dual Tracking ±50V Power Supply; Voice-Operated Switch With Delayed Audio; 16-Channel Mixing Desk, Pt.3; Active CW Filter.

June 1990: Multi-Sector Home Burglar Alarm; Build A Low-Noise Universal Stereo Preamplifier; Load Protector For Power Supplies.

July 1990: Digital Sine/Square Generator, Pt.1 (covers 0-500kHz); Burglar Alarm Keypad & Combination Lock; Build A Simple Electronic Die; A Low-Cost Dual Power Supply.

August 1990: High Stability UHF Remote Transmitter; Universal Safety Timer For Mains Appliances (9 Minutes); Horace The Electronic Cricket; Digital Sine/Square Generator, Pt.2.

September 1990: A Low-Cost 3-Digit Counter Module; Build A Simple Shortwave Converter For The 2-Metre Band; The Care & Feeding Of Nicad Battery Packs (Getting The Most From Nicad Batteries).

October 1990: The Dangers of PCBs; Low-Cost Siren For Burglar Alarms; Dimming Controls For The Discolight; Surround Simulator; DC Offset For DMMs; NE602 Converter Circuits.

November 1990: Connecting Two TV Sets To One VCR; Build An Egg Timer; Low-Cost Model Train Controller; 1.5V To 9V DC Converter; Introduction To Digital Electronics; A 6-Metre Amateur Transmitter.

January 1991: Fast Charger For Nicad Batteries, Pt.1; Have Fun With The Fruit Machine (Simple Poker Machine); Build A Two-Tone Alarm Module; The Dangers of Servicing Microwave Ovens.

March 1991: Transistor Beta Tester Mk.2; A Synthesised AM Stereo Tuner, Pt.2; Multi-Purpose I/O Board For PC-Compatibles; Universal Wideband RF Preamplifier For Amateur Radio & TV.

May 1991: 13.5V 25A Power Supply For Transceivers; Stereo Audio Expander; Fluorescent Light Simulator For Model Railways; How To Install Multiple TV Outlets, Pt.1.

July 1991: Loudspeaker Protector For Stereo Amplifiers; 4-Channel Lighting Desk, Pt.2; How To Install Multiple TV Outlets, Pt.2; Tuning In To Satellite TV, Pt.2.

September 1991: Digital Altimeter For Gliders & Ultralights; Ultrasonic Switch For Mains Appliances; The Basics Of A/D & D/A Conversion; Plotting The Course Of Thunderstorms.

October 1991: Build A Talking Voltmeter For Your PC, Pt.1; SteamSound Simulator For Model Railways Mk.II; Magnetic Field Strength Meter; Digital Altimeter For Gliders, Pt.2; Military Applications Of R/C Aircraft.

November 1991: Build A Colour TV Pattern Generator, Pt.1; A Junkbox 2-Valve Receiver; Flashing Alarm Light For Cars; Digital Altimeter For Gliders, Pt.3; Build A Talking Voltmeter For Your PC, Pt.2.

December 1991: TV Transmitter For VCRs With UHF Modulators; IR Light Beam Relay; Colour TV Pattern Generator, Pt.2; Index To Vol.4.

March 1992: TV Transmitter For VHF VCRs; Thermostatic Switch For Car Radiator Fans; Coping With Damaged Computer Directories; Valve Substitution In Vintage Radios.

April 1992: IR Remote Control For Model Railroads; Differential Input Buffer For CROs; Uninterruptible Computer Memory; Aligning Vintage Radio Receivers; Pt.1.

June 1992: Multi-Station Headset Intercom; Pt.1: Video Switcher For Camcorders & VCRs; IR Remote Control For Model Railroads, Pt.3; 15-Watt 12-240V Inverter; A Look At Hard Disk Drives.

October 1992: 2kW 24VDC - 240VAC Sinewave Inverter; Multi-Sector Home Burglar Alarm; Pt.2: Mini Amplifier For Personal Stereos; A Regulated Lead-Acid Battery Charger.

February 1993: Three Projects For Model Railroads; Low Fuel Indicator For Cars; Audio Level/VU Meter (LED Readout); An Electronic Cockroach; 2kW 24VDC To 240VAC Sinewave Inverter, Pt.5.

March 1993: Solar Charger For 12V Batteries; Alarm-Triggered Security Camera; Reaction Trainer; Audio Mixer for Camcorders; A 24-Hour Sidereal Clock For Astronomers.

April 1993: Solar-Powered Electric Fence; Audio Power Meter; Three-Function Home Weather Station; 12VDC To 70VDC Converter; Digital Clock With Battery Backup.

June 1993: AM Radio Trainer, Pt.1; Remote Control For The Woofer Stopper; Digital Voltmeter For Cars; Windows-Based Logic Analyser.

July 1993: Single Chip Message Recorder; Light Beam Relay Extender; AM Radio Trainer, Pt.2; Quiz Game Adjudicator; Windows-Based Logic Analyser, Pt.2; Antenna Tuners – Why They Are Useful.

August 1993: Low-Cost Colour Video Fader; 60-LED Brake Light Array; Microprocessor-Based Sidereal Clock; Satellites & Their Orbits.

September 1993: Automatic Nicad Battery Charger/Discharger; Stereo Preamplifier With IR Remote Control; Pt.1; In-Circuit Transistor Tester; +5V to +15V DC Converter; Remote-Controlled Cockroach.

October 1993: Courtesy Light Switch-Off Timer For Cars; Wireless Microphone For Musicians; Stereo Preamplifier With IR Remote Control, Pt.2; Electronic Engine Management, Pt.1.

November 1993: High Efficiency Inverter For Fluorescent Tubes; Stereo Preamplifier With IR Remote Control; Pt.3; Siren Sound Generator; Engine Management, Pt.2; Experiments For Games Cards.

December 1993: Remote Controller For Garage Doors; Build A LED Stroboscope; Build A 25W Audio Amplifier Module; A 1-Chip Melody Generator; Engine Management, Pt.3; Index To Volume 6.

January 1994: 3A 40V Variable Power Supply; Sun Panel Switching Regulator; Printer Status Indicator; Mini Drill Speed Controller; Stepper Motor Controller; Active Filter Design; Engine Management, Pt.4.

February 1994: Build A 90-Second Message Recorder; 12-240VAC 200W Inverter; 0.5W Audio Amplifier; 3A 40V Adjustable Power Supply; Engine Management, Pt.5; Airbags In Cars – How They Work.

March 1994: Intelligent IR Remote Controller; 50W (LM3876) Audio Amplifier Module; Level Crossing Detector For Model Railways; Voice Activated Switch For FM Microphones; Engine Management, Pt.6.

April 1994: Sound & Lights For Model Railway Level Crossings; Discrete Dual Supply Voltage Regulator; Universal Stereo Preamplifier; Digital Water Tank Gauge; Engine Management, Pt.7.

May 1994: Fast Charger For Nicad Batteries; Induction Balance Metal Locator; Multi-Channel Infrared Remote Control; Dual Electronic Dice; Simple Servo Driver Circuits; Engine Management, Pt.8.

June 1994: A Coolant Level Alarm For Your Car; 80-Metre AM/CW Transmitter For Amateurs; Converting Phono Inputs To Line Inputs; PC-Based Nicad Battery Monitor; Engine Management, Pt.9.

July 1994: Build A 4-Bay Bow-Tie UHF TV Antenna; PreChamp 2-Transistor Preamplifier; Steam Train Whistle & Diesel Horn Simulator; 6V SLA Battery Charger; Electronic Engine Management, Pt.10.

August 1994: High-Power Dimmer For Incandescent Lights; Dual Diversity Tuner For FM Microphones, Pt.1; Nicad Zapper (For Resurrecting Nicad Batteries); Electronic Engine Management, Pt.11.

September 1994: Automatic Discharger For Nicad Batteries; MiniVox Voice Operated Relay; AM Radio For Weather Beacons; Dual Diversity Tuner For FM Mics, Pt.2; Electronic Engine Management, Pt.12.

October 1994: How Dolby Surround Sound Works; Dual Rail Variable Power Supply; Build A Talking Headlight Reminder; Electronic Ballast For Fluorescent Lights; Electronic Engine Management, Pt.13.

November 1994: Dry Cell Battery Rejuvenator; Novel Alphanumeric Clock; 80-Metre DSB Amateur Transmitter; Twin-Cell Nicad Discharger (See May 1993); How To Plot Patterns Direct to PC Boards.

December 1994: Easy-To-Build Car Burglar Alarm; Three-Spot Low Distortion Electronic Dice; Clifford – A Pesky Electronic Cricket; Remote Control System for Models, Pt.1; Index to Vol.7.

January 1995: Sun Tracker For Solar Panels; Battery Saver For Torches; Dolby Pro-Logic Surround Sound Decoder, Pt.2; Dual Channel UHF Remote Control; Stereo Microphone Preamplifier.

February 1995: 2 x 50W Stereo Amplifier Module; Digital Effects Unit For Musicians; 6-Channel Thermometer With LCD Readout; Wide Range Electrostatic Loudspeakers, Pt.1; Oil Change Timer For Cars; Remote Control System For Models, Pt.2.

March 1995: 2 x 50W Stereo Amplifier, Pt.1; Subcarrier Decoder For FM Receivers; Wide Range Electrostatic Loudspeakers, Pt.2; IR Illuminator For CCD Cameras; Remote Control System For Models, Pt.3.

April 1995: FM Radio Trainer, Pt.1; Balanced Mic Preamp & Line Filter; 50W/Channel Stereo Amplifier, Pt.2; Wide Range Electrostatic Loudspeakers, Pt.3; 8-Channel Decoder For Radio Remote Control.

May 1995: Build A Guitar Headphone Amplifier; FM Radio Trainer, Pt.2; Transistor/Mosfet Tester For DMMs; A 16-Channel Decoder For Radio Remote Control; Introduction to Satellite TV.

June 1995: Build A Satellite TV Receiver; Train Detector For Model Railways; 1W Audio Amplifier Trainer; Low-Cost Video Security System; Multi-Channel Radio Control Transmitter For Models, Pt.1.

July 1995: Electric Fence Controller; How To Run Two Trains On A Single Track (Incl. Lights & Sound); Setting Up A Satellite TV Ground Station; Build A Reliable Door Minder.

August 1995: Fuel Injector Monitor For Cars; Gain Controlled Microphone Preamp; Audio Lab PC-Controlled Test Instrument, Pt.1; How To Identify IDE Hard Disk Drive Parameters.

September 1995: Railpower Mk.2 Walkaround Throttle For Model Railways, Pt.1; Keypad Combination Lock; The Vader Voice; Jacob's Ladder Display; Audio Lab PC-Controlled Test Instrument, Pt.2.

October 1995: 3-Way Loudspeaker System; Railpower Mk.2 Walkaround Throttle For Model Railways, Pt.2; Build A Fast Charger For Nicad Batteries.

November 1995: Mixture Display For Fuel Injected Cars; CB Transverter For The 80M Amateur Band, Pt.1; PIR Movement Detector.

December 1995: Engine Immobiliser; 5-Band Equaliser; CB Transverter For The 80M Amateur Band, Pt.2; Subwoofer Controller; Knock Sensing In Cars; Index To Volume 8.

January 1996: Surround Sound Mixer & Decoder, Pt.1; Magnetic Card Reader; Build An Automatic Sprinkler Controller; IR Remote Control For The Railpower Mk.2; Introduction To Batteries For Long Life.

April 1996: 125W Audio Amplifier Module; Knock Indicator For Leaded Petrol Engines; Multi-Channel Radio Control Transmitter; Pt.3.

May 1996: High Voltage Insulation Tester; Knightrider LED Chaser; Simple Intercom Uses Optical Cable; Cathode Ray Oscilloscopes, Pt.3.

June 1996: BassBox CAD Loudspeaker Software Reviewed; Stereo Simulator (uses delay chip); Rope Light Chaser; Low Ohms Tester For Your DMM; Automatic 10A Battery Charger.

July 1996: Build A VGA Digital Oscilloscope, Pt.1; Remote Control

ORDER FORM

Please send the following back issues: _____

Enclosed is my cheque/money order for $_____or please debit my: ❑ Bankcard ❑ Visa Card ❑ Master Card

Card No. | | | | | | | | | | | | | | | | |

Signature _____ Card expiry date____ /____

Name _____ Phone No (___) _____
PLEASE PRINT

Street _____

Suburb/town _____ Postcode _____

Note: prices include postage & packing

Australia ..... $A8.80 (incl. GST)
Overseas (airmail) $A10

Detach and mail to:
Silicon Chip Publications, PO Box 139, Collaroy, NSW, Australia 2097.
Or call (02) 9979 5644 & quote your credit card details or fax details to (02) 9979 6503.
Email: silchip@siliconchip.com.au

SAVE 10% BY SUBSCRIBING SO IF YOU DO SAVE 10% ON MORE!

Extender For VCRs; 2A SLA Battery Charger; 3-Band Parametric Equalizer; Single Channel 8-Bit Data Logger.

August 1996: Introduction to IGBTs; Electronic Starter For Fluorescent Lamps; VGA Oscilloscope, Pt.2; 350W Amplifier Module; Masthead Amplifier For TV & FM; Cathode Ray Oscilloscopes, Pt.8.

September 1996: VGA Oscilloscope, Pt.3; IR Stereo Headphone Link, Pt.1; High Quality PA Loudspeaker; 3-Band HF Amateur Radio Receiver; Cathode Ray Oscilloscopes, Pt.5.

October 1996: Send Video Signals Over Twisted Pair Cable; Power Supply Guard; Low Light Conditioner; 50W DC Converter For Car Hifi Systems, Pt.1; IR Stereo Headphone Link, Pt.2; Build A Multi-Media Sound System, Pt.1; Multi-Channel Radio Control Transmitter, Pt.8.

November 1996: 8-Channel Stereo Mixer, Pt.1; Low-Cost Fluorescent Light Inverter; Remote Volume Control For Multi-Media Sound System, Pt.2; 600W DC-DC Converter For Car Hifi Systems, Pt.2.

December 1996: Active Filter Cleans Up Your CW Reception; A Fast Clock For Railway Modellers; Laser Pistol & Electronic Target; Build A Sound Level Meter; Cathode Ray Oscilloscopes, Pt.7; Index To Vol.9.

January 1997: How To Network Your PC; Control Panel For Multiple Smoke Alarms, Pt.1; Build A Pink Noise Source; Computer Controlled Dual Power Supply, Pt.1; Digi-Temp Monitors Eight Temperatures.

February 1997: PC-Controlled Moving Message Display; Computer Controlled Dual Power Supply, Pt.2; Alarm-A-Phone; Loud Sounding Telephone Alarm; Control Panel For Multiple Smoke Alarms, Pt.2.

March 1997: Driving A Computer By Remote Control; Plastic Power PA Amplifier (175W); Signalling & Lighting For Model Railways; Build Lumbar LED Clock; Cathode Ray Oscilloscopes, Pt.7.

April 1997: Simple Timer With No ICs; Digital Voltmeter For Cars; Loudspeaker Protector For Stereo Amplifiers; Model Train Controller; A Look At Signal Tracing; Pt.1; Cathode Ray Oscilloscopes, Pt.8.

May 1997: Neon Tube Modulator For Light Systems; Traffic Lights For Model Railways; Stereophone Amplifier — Review; Messages In Thin Air; A Look At Signal Tracing; Pt.2; Cathode Ray Oscilloscopes, Pt.9.

June 1997: PC-Controlled Thermometer/Thermostat; TV Pattern Generator, Pt.1; Audio/RF Signal Tracer; High-Current Speed Controller For 12V/24V Motors; Loudspeaker Protector For Stereo Amplifiers.

July 1997: Infrared Remote Volume Control; A Flexible Interface Card For PCs; Points Controller For Model Railways; Colour TV Pattern Generator, Pt.2; An In-Line Mixer For Radio Control Receivers.

August 1997: The Bass Barrel Subwoofer; 500 Watt Audio Power Amplifier Module, Pt.1; Simple Bench Top Regulated Adjustable PC Card For Stepper Motor Control; Remote Controlled Gates For Your Home.

September 1997: Multi-Spark Capacitor Discharge Ignition; 500W Audio Power Amplifier, Pt.2; A Video Security System For Your Home; PC Card For Controlling Two Stepper Motors; HiFi On A Pocket.

October 1997: Build A 5-Digit Tachometer; Add Central Locking To Your Car; PC-Controlled 6-Channel Voltmeter; 500W Audio Power Amplifier, Pt.3; Customising The Windows 95 Start Menu.

November 1997: Heavy Duty 10A 240VAC Motor Speed Controller; Easy-To-Use Cable & Wiring Tester; Build A Model Diesel Roller; Replacing Foam Speaker Surrounds; Understanding Electric Lighting Pt.1.

December 1997: Speed Alarm For Cars; 2-Axis Robot With Gripper; Stepper Motor Driver With Onboard Buffer; Power Supply For Stepper Motor Cards; Understanding Electric Lighting Pt.2; Index To Vol.10.

January 1998: Build Your Own 4-Channel Lightshow, Pt.1 (runs off 12VDC or 12VAC); Command Control System For Model Railways, Pt.1; Pan Controller For CCD Cameras.

February 1998: Multi-Purpose Fast Battery Charger, Pt.1; Telephone Exchange Simulator For Testing; Command Control System For Model Railways, Pt.2; Build Your Own 4-Channel Lightshow, Pt.2.

April 1998: Automatic Garage Door Opener, Pt.1; 40V 8A Adjustable Power Supply, Pt.1; PC-Controlled 0-30kHz Sinewave Generator; Build A Laser Light Show Scanning Table; Build A Model Diesel, Replacing Foam Speaker Surrounds; Understanding Electric Lighting Pt.1.

May 1998: Troubleshooting Your PC, Pt.1; Build A 3-LED Logic Probe; Automatic Garage Door Opener, Pt.2; Command Control For Model Railways, Pt.4; 40V 8A Adjustable Power Supply, Pt.2.

June 1998: Troubleshooting Your PC, Pt.2; Universal High Energy Ignition System; The Woodie Friend Cable Tester; Universal Stepper Motor Controller; Command Control For Model Railways, Pt.5.

July 1998: Troubleshooting Your PC, Pt.3; 150W/Ch Class-A Audio Amplifier, Pt.1; Simple Charger For 6V & 12V SLA Batteries; Automatic Semiconductor Analyser; Understanding Electric Lighting, Pt.8.

August 1998: Troubleshooting Your PC, Pt.4 (Adding Extra Memory); Simple I/O Card With Automatic Data Logging; Build A Beat Triggered Strobe; 150W/Ch Class-A Stereo Amplifier, Pt.2.

September 1998: Troubleshooting Your PC, Pt.5; A Blocked Air-Filter Alarm; Way-Wax Pedal For Guitars; Jacob's Ladder; Gear Change Indicator For Cars; Capacity Indicator For Rechargeable Batteries.

October 1998: AC Millivoltmeter, Pt.1; PC-Controlled Stress-O-Meter; Versatile Electronic Guitar Limiter; 12V Trickle Charg-er For Float Conditions; Adding An External Battery Pack To Your Flashgun.

November 1998: The Christmas Star; A Turbo Timer For Cars; Build A Poker Machine, Pt.1; FM Transmitter For Musicians; Lab Quality AC Millivoltmeter, Pt.2; Improving AM Radio Reception, Pt.1.

December 1998: Engine Immobiliser Mk.2; Thermocouple Adaptor For DMMs; Regulated 12V DC Plugpack; Build A Poker Machine, Pt.2; Improving AM Radio Reception, Pt.2; Mixer Module For F3B Gliders.

January 1999: High-Voltage Megohm Tester; Getting Started With BASIC Stamp; LED Bargraph Ammeter For Cars; Keypad Engine Immobiliser; Improving AM Radio Reception, Pt.3.

March 1999: Getting Started With Linux; Pt.1; Build A Digital Anemometer; Simple DIY PIC Programmer; Easy-To-Build Audio Compressor; Low Distortion Audio Signal Generator, Pt.2.

April 1999: Getting Started With Linux; Pt.2; High-Power Electric Fence Controller; Bass Guitar Bass Clarifier; Stereophone Transmitter/ Thermometer; Build An Infrared Sentry; Rev Limiter For Cars.

May 1999: The Line Dancer Robot; An X-Y Table With Stepper Motor Control, Pt.1; Three Electric Fence Testers; Heart Of UEIs; Build A Carbon Monoxide Alarm; Getting Started With Linux, Pt.3.

June 1999: FM Radio Tuner Card For PCs; X-Y Table With Stepper Motor Control, Pt.2; Programmable Ignition Timing Module For Cars, Pt.1; Hard Disk Drive Upgrades Without Reinstalling Software?

July 1999: Build A Dog Silencer; 10µH to 19.99mH Inductance Meter; Build An Automotive Transmitter Immobiliser; Ignition Timing Module For Cars, Pt.2; XYZ Table With Stepper Motor Control, Pt.3.

August 1999: Remote Modem Controller; Daytime Running Lights For Cars; Build A PC Monitor Checker; Switching Temperature Controller; XYZ Table With Stepper Motor Control, Pt.4; Electric Lighting, Pt.14.

September 1999: Autonomouse The Robot, Pt.1; Voice Direct Speech Recognition Module; Digital Electrolytic Capacitance Meter; XYZ Table With Stepper Motor Control, Pt.5; Peltier-Powered Can Cooler.

October 1999: Build The Railpower Model Train Controller, Pt.1; Semiconductor Curve Tracer; Autonomouse The Robot, Pt.2; XYZ Table With Stepper Motor Control, Pt.6; Introducing Home Theatre.

November 1999: Setting Up An Email Server; Speed Alarm For Cars, Pt.1; LED Christmas Tree; Intercom Station Expander; Foldback Loudspeaker System; Autonomouse The Robot, Pt.3; Remote Messages In Thin Air; A Look At Signal Tracing; Pt.2; Cathode Ray Oscilloscopes, Pt.9.

June 1997: PC-Controlled Thermometer/Thermostat; TV Pattern Generator, Pt.1; Audio/RF Signal Tracer; High-Current Speed Controller For 12V/24V Motors; Loudspeaker Protector For Stereo Amplifiers.

December 1999: Spring Reverberation Module; An Audio-Video Test Generator; Build A Video Security System For Your Home; A Parallel Port Interface Card; Off-Hook Indicator for Telephone Lines.

February 2000: Multi-Sector Sprinkler Controller; A Digital Voltmeter For Your Car; An Ultrasonic Parking Radar; Build A Safety Switch Checker; Getting Started With Arduino Software.

March 2000: Resurrecting An Old Computer; Low Distortion 100W Amplifier Module, Pt.1; Electronic Wind Vane With 16-LED Display; Glowplug Driver For Powered Models; The OzTrip Car Computer, Pt.1.

May 2000: Ultra-LD Stereo Amplifier, Pt.2; Build A LED Dice (With PIC Microcontroller); Low-Cost AT Keyboard Translator (Converts IBM Scan-Codes To ASCII); 50A Motor Speed Controller For Models.

June 2000: Automatic Rain Gauge With Digital Readout; Parallel Port VHF FM Receiver; L'il Powerhouse Switchmode Power Supply (1.23V to 40V) Pt.1; CD Compressor For Cars; The OzTrip Car Computer, Pt.2.

July 2000: A Moving Message Display: Compact Fluorescent Lamp Driver; El-Cheapo Musicians' Lead Tester; L'il Powerhouse Switchmode Power Supply (1.23V to 40V) Pt.2.

August 2000: Build A Theremin For Really Eerie Sounds; Come In Spinner (wireless messages in "mid-air"); Powering Switch For 240VAC Lamps; Structured Cabling For Computer Networks.

September 2000: Build A Swimming Pool Alarm; An 8-Channel PC Relay Board; Fuel Mixture Display For Cars, Pt.1; Protoboards – The Easy Way Into Electronics, Pt.3; Simple Battery Monitor.

October 2000: Guitar Jammer For Practice & Jam Sessions; Boozt Buster Breath Tester; A Wand-Mounted Inspection Camera; Installing A Free-Air Subwoofer In Your Car; Fuel Mixture Display For Cars, Pt.2.

November 2000: Santa & Rudolf Chrissie Display; 2-Channel Guitar Preamplifier, Pt.1; Message Bank & Missed Call Alert; Protoboards – The Easy Way Into Electronics, Pt.3.

December 2000: Home Networking For Shared Internet Access; Build A Bright-White LED Torch; 2-Channel Guitar Preamplifier, Pt.2 (Digital Reverb); Driving An LCD From The Parallel Port; Index To Vol.13.

January 2001: How To Transfer LPs & Tapes To CD; The LP Doctor – Clean Up Clicks & Pops, Pt.1; Arbitrary Waveform Generator; 2-Channel Guitar Preamplifier, Pt.3; PIC Programmer & TestBed.

February 2001: An Easy Way To Make PC Boards; L'il Pulser Train Controller; A MIDI Interface For PCs; Build The Bass Blazer; 2-Metre Groundplane Antenna; The LP Doctor – Clean Up Clicks & Pops, Pt.2.

March 2001: Making Photo Resist PC Boards; Big-Digit 12/24 Hour Clock; Parallel Port PIC Programmer & Checkerboard; Protoboards – The Easy Way Into Electronics, Pt.5; A Simple MIDI Interface Box.

April 2001: A GPS Module For Your PC; Dr Video – An Easy-To-Build Video Stabiliser; Tremolo Unit For Musicians; Minimitter FM Stereo Transmitter; Intelligent Nicad Battery Charger.

May 2001: Powerful 12V Mini-Stereo Amplifier; Two White-LED Torches To Build; PowerPak – A Multi-Voltage Power Supply; Using Linux To Share An Internet Connection, Pt.1; Tweaking Windows With TweakUI.

June 2001: Fast Universal Battery Charger, Pt.1; Phonome – Call, Listen In & Switch Devices On & Off; L'il Snooper – A Low-Cost Automatic Camera Switcher; Using Linux To Share An Internet Connection, Pt.2; A PC To Die For, Pt.1 (Building Your Own PC).

July 2001: The HeartMate Heart Rate Monitor; Do Not Disturb Telephone Timer; Pic-Toc – A Simple Alarm Clock; Fast Universal Battery Charger, Pt.2; A PC To Die For, Pt.2; Backing Up Your Email.

August 2001: DI Box For Musicians; 200W Mosfet Amplifier Module; Headlight Reminder; 40MHz 6-Digit Frequency Counter Module; A PC To Die For, Pt.3; Using Linux To Share An Internet Connection, Pt.3.

September 2001: Making MP3s – Rippers & Encoders; Build Your Own MP3 Player, Pt.1; PC-Controlled Mains Switch; A Compound Noise Source For Tinnitus Sufferers; The Sooper Snooper Directional Microphone; Using Linux To Share An Internet Connection, Pt.4.

November 2001: Ultra-LD 100W RMS/Channel Stereo Amplifier, Pt.1; Neon Tube Modulator For Cars; Low-Cost Audio/Video Distribution Amplifier; Short Message Recorder/ Player; Computer Tips.

December 2001: A Look At Linux; Build A PC Infrared Transceiver; Ultra-LD 100W RMS/Ch Stereo Amplifier, Pt.2; Pandy Lights – The Intriguing Colour Display; PIC Fun – Learning About Micros.

January 2002: Touch And/Or Remote-Controlled Light Dimmer, Pt.1; A Cheap 'n'Easy Motorbike Alarm; 100W RMS/Channel Stereo Amplifier, Pt.3; Build A Raucous Alarm; FAQs On The MP3 Audio Format.

February 2002: 10-Channel IR Remote Control Receiver; 2.4GHz High-Power Audio-Video Link; Assemble Your Own 2-Way Tower Speakers; Touch And/Or Remote-Controlled Light Dimmer, Pt.2; Booting A PC Without a Keyboard; 4-Way Event Timer.

March 2002: Mighty Midget Audio Amplifier Module; The Itsy-Bitsy USB Lamp; 6-Channel IR Remote Volume Control, Pt.1; RIAA Preamplifier For Magnetic Cartridges; 12/24V Intelligent Solar Power Battery Charger; Gemini Stereo Amplifier Module Using Your PC's Soundcard.

April 2002: Automatic Single-Channel Light Dimmer; Pt.1; Build A Water Level Indicator; Multiple-Output Bench Power Supply; Versatile Multi-Mode Timer; 6-Channel IR Remote Volume Control, Pt.2.

May 2002: 32-LED Knightrider; The Battery Guardian (Cuts Power When Battery Is Flat); Automatic Single-Channel Light Dimmer; Automatic Single-Channel Light Dimmer; Pt.2; Stepper Motor Controller.

June 2002: Lock Out The Bad Guys with A Firewall; Remote Volume Control For Stereo Amplifiers; The "Matchless" Metal Locator; Compact Q-Meter For Antenna Analysis; Constant High-Current Battery Charger.

July 2002: Telephone Headset Adaptor; Rolling Code 4-Channel UHF Remote Control; Remote Volume Control For The Ultra-LD Stereo Amplifier; Direct Conversion Receiver For Radio Amateurs, Pt.1.

August 2002: Digital Instrumentation Software For Your PC; Digital Storage Light Meter; Digital Thermometer/Thermostat; Serial Card Interface For PC Test Instruments; Direct Conversion Receiver For Radio Amateurs, Pt.2; Spruce Up Your PC With XP-Style Icons.

September 2002: 12V Fluorescent Lamp Inverter; 8-Channel Infrared Remote Control; 50-Watt DC Electronic Load; Driving Light & Accessory Protector For Cars; Spyware – An Update.

October 2002: Speed Controller For Universal Motors; PC Parallel Port Wizard: "Whistle & Point" Cable Tracer; Build An AVR ISP Serial Programmer; Watch Out TV's Your Own Home.

November 2002: SuperCharger For NiCd/NiMH Batteries, Pt.1; Windows-Based EPROM Programmer, Pt.1; 4-Digit Crystal-Controlled Timing Module; Using Linux To Share An Optus Cable Modem, Pt.1.

December 2002: Receiving TV From Satellites; Pt.1; The Microminder Stereo FM Transmitter; Windows-Based EPROM Programmer, Pt.2; SuperCharger For NiCd/NiMH Batteries; Pt.2; Simple VHF FM/AM Radio; Using Linux To Share An Optus Cable Modem, Pt.2.

January 2003: Receiving TV From International Satellites; Pt.2; Reader/ Programmer For Serial EEPROMs; SC480 50W RMS Amplifier Module, Pt.1; A "Tiptronic-Style" Gear Indicator; Active 3-Way Crossover For Loudspeakers; Using Linux To Share An Optus Cable Modem, Pt.3.

February 2003: The PortaPal Public Address System, Pt.1; 240V Mains Filter For HiFi Systems; SC480 50W RMS Amplifier Module, Pt.2; Windows-Based EPROM Programmer, Pt.3; Using Linux To Share An Optus Cable Modem, Pt.4; Tracking Down Elusive PC Faults.

March 2003: LED Lighting For Your Car; Peltier-Effect Tinnie Cooler; PortaPal Public Address System, Pt.2; 12V SLA Battery Float Charger; Build The Little Dynamite Subwoofer; Fun With The PICAXE (Build A Shop Door Minder); Computer Video Recorder Adaptation; Playing Seasons.

April 2003: Video-Audio Booster For Home Theatre Systems; A Highly-Flexible Keypad Alarm; Telephone Dialler For Burglar Alarms; Three Do-It-Yourself PIC Programmer Kits; More Fun With The PICAXE; Pt.3 (Heartbeat Simulator); Electric Shutter Release For Cameras.

May 2003: Widgybox Guitar Distortion Effects Unit; 10MHz Direct Digital Synthesis Generator; Big Blaster Subwoofer; Printer Port Simulator; More Fun With The PICAXE, Pt.4 (Motor Controller).

June 2003: More Fun With The PICAXE, Pt.5 (Checkpoint Door Controller); Compact Telephone Intercom; PICAXE-08 Port Expansion; Sunset Switch For Security & Garden lighting; Digital Reaction Timer; Adjustable DC-DC Converter For Cars; Long-Range 4-Channel UHF Remote Control

PLEASE NOTE: Issues not listed have sold out. All other issues are in stock. We can supply photostat copies from sold-out issues for $8.80 per article (includes p&p). When supplying photostat articles or back copies, we automatically supply any relevant notes & errata at no extra charge. A complete index to all articles published to date can be downloaded free from our web site: **www.siliconchip.com.au**

ASK SILICON CHIP

Got a technical problem? Can't understand a piece of jargon or some technical principle? Drop us a line and we'll answer your question. Write to: Ask Silicon Chip, PO Box 139, Collaroy Beach, NSW 2097; or send an email to silchip@siliconchip.com.au

Motor speed controller for 120VAC

I have purchased a Universal Motor Speed Controller from Jaycar Electronics, as published in the October 2002 issue of SILICON CHIP. I live in the USA and of course will be using it with 120VAC line voltage.

Will it work OK using 120VAC? If not, what modifications do I need to make to the circuit? (R. W., Torrance, CA, USA).

● Operation at 120V and 60Hz will require one resistor change. Substitute a 56kΩ 1W resistor for the 100kΩ 1W resistor. That is all there is to it.

12V LED light wanted

You have had two torch projects based on LEDs (December 2000 and May 2001) and the last one was terrific. I would like to see a lamp made out of three LEDs that runs off 12V. I think that there would be a huge amount of interest in such a lamp because there are a lot of situations where this could be used.

Every boat, motor home and caravan owner would love the low consumption with the lovely crisp white light that these devices put out.

I would like to know whether you would do such a project. If not, could you please give me some pointers as to how to go about it? Would a simple current limiting circuit be the best way? (N. Z., via email).

● Running three white LEDs from 12V is easy – just connect them in series via a 56Ω 0.25W resistor.

Ford AU audible car locking

An annoying issue with the Ford AU model (and probably other cars) is that when you lock or unlock the car using the remote keypad, the only acknowledgement is the single or double flashing of all the indicators. On a sunny day, this is difficult to see and usually involves getting closer to see the lights or looking at the door button position.

Can you suggest an audible "beeper" modification to this model – allowing both visual and audible confirmation of remote locking. (M. D., via email).

● Most modern cars with central locking do not have any audible indication – and a good thing too for city dwellers since the chirp of the horn on earlier systems would have woken and annoyed many people.

If you want to fit an audible chirp device, you could wire a high output piezo siren across the master solenoid in the central locking system. No other circuitry would be required.

Insulation resistance of capacitors

I have just begun restoring an AWA Fisk Radiola model R38. I first replaced both high voltage electrolytics, which were contained in a metal case covered in black 'goo'. As I have a High Voltage Insulation Tester (SILICON CHIP, May 1996), I began to test some of the paper capacitors. These all showed resistances below 1 Gigohm.

I then tested a variety of capacitors in my 'spare parts' box, which included paper capacitors from the 1960s as well as modern high-voltage types. I was surprised by the wide variation in resistances measured. Many of the older (unused) paper capacitors showed resistances of only a few Gigohms, especially those labelled UCC.

So I am concerned whether non-electrolytic capacitors should be considered good only if their measured resistance is well in excess of 1 Gigohm, especially for use in older valve radios.

And in a probably rather unwise move, after simple DMM checks I applied (for only a few seconds) mains power to the R38. With only the 80 rectifier inserted, the inside of the valve glowed a pretty blue (corona discharge?) and I immediately removed power. It is a long time since I have observed a working 80 rectifier valve but I suspect that the blue discharge is not a good sign? (R. R., Ocean Reef, WA).

● As far as valve circuits are concerned, insulation resistance of non-electrolytic capacitors is only critical

Noise in Playmaster Pro Series Three

I built the Playmaster Pro Series Three power amplifier some time ago and have greatly enjoyed its terrific performance. About a year ago, I became aware that the clipping warning LED on one channel was lighting, even though there was no discernible distortion and the music volume was usually very low.

As time progressed, noise did become evident in the channel – initially a very slight crackle, which has gradually increased to a point that the sound is no longer acceptable. The fault is certainly within the amplifier, as I have swapped inputs and speaker connections.

The electros in the amplifier circuit have been replaced to no avail. There is a sizeable dent in the side of one of the reservoir capacitors in the power supply, however no trace of 50Hz in the output. Any idea what's going on? (R. C., via email).

● Our guess is that the amplifier is taking off at a very high frequency. You might need a wideband scope or a communications radio (even an FM radio) to confirm this. A cure probably involves resoldering all connections around the Mosfets or replacing the low value capacitors.

if they are involved in coupling signals from the valve plates to the grid of a following stage. In this situation, if a capacitor had an insulation resistance of 100MΩ (say) it could severely affect the grid bias on the following stage. You would want the capacitor to be at least 1Gigohm.

Modern polyester capacitors could be expected to be in excess of 50GΩ or a lot more. Polystyrene capacitors are typically 1TΩ or more (ie, 1 Teraohm or 1000Gigohms).

On the other hand, if the capacitor is used in a bypass, tuning or tone control stage, where it cannot affect valve operating conditions, 100MΩ would be OK. However, you might still replace to it to avoid failure in the future.

Any valve with a blue discharge is gassy – it's kaput.

Twisted wires in Ultra-LD amplifier

I completed the Ultra-LD Amplifier a few months ago and it sounds great; certainly well worth the money and aside from a few small glitches, worth the construction time. Excellent!

I have a comment about the design of the LED display. Apart from the dubious value in terms of extra cost and construction time, I was intrigued with the comments made about preamplifier modifications, on page 72 of the January 2002 issue.

My kit had the mentioned modification but it is still susceptible to humidity effects on power-up, but then again it is quite humid here in Port Vila and high electricity costs prohibit using long-term air conditioners. So why not design a special calibrated tropical version with the LEDs displaying humidity for about a minute after power up and then reverting to its other role?

Finally, I have a small concern with the construction instructions on page 66 the of January 2002 edition which describes the twisting of connecting wires. I feel that an essential aspect affecting sound quality may have been omitted here. I had already assembled the unit when this occurred to me; too late to change. Should the left channel wire pairs be twisted opposite to the right channel? Are there any reported studies on effects of wire helicity and sound quality? (D. S., Port Vila, Vanuatu).

- Have a look at the revised preamp board with remote motorised volume control in the June & July 2002 issues. This addresses the humidity issue although it does not display it.

Direction of twist of wiring is not important – the idea is to cancel the magnetic fields generated by the current flow.

Troubleshooting the video enhancer

I have a problem with the Video Enhancer and Stabiliser published in the November 1997 issue of "Electronics Australia" and which is similar in layout to the Dr Video project in the April 2001 issue of SILICON CHIP. The problem is in the stabiliser part of the circuit.

When video signal is running through the unit, I see on the scope the negative-going vertical sync pulses at pin 3 of U3, a positive pulse of 5V at pin 3 or U2a and these pass though U4 (555) OK and appear at pin 4 of U2b. The pulse is 1.1ms and is adjustable by RV1.

However, the output at pin 5 of U3 does not seem to be correct in that I am not seeing a positive pulse at pin 11 of U2d of any significance. I would have thought that I would see a 5V pulse but am seeing nothing like it.

I have changed U3 and U2 and

Driving An Inductive PA Loop

I am responsible for the public address system in our church but I had no part in the botched installation of the current PA/inductive loop system.

The current amplifier is supposedly capable of driving 190W into a 2-ohm load. This is probably "peak music power" as the internal componentry does not seem capable of producing more than about 50W.

While it appeared to work initially, the inductive loop has long since ceased to function and I am told that you cannot feed two turns with a total length of just over 102 metres from a direct amplifier output. This has a resistance of between 4Ω and 5Ω. The impedance is undoubtedly considerably less.

This has been proven by driving the loop through the original amplifier, a 30W impedance-matched PA unit with a 100V line transformer. It does the job adequately although we are pushing it to its upper limits. The input winding of the transformer reads approximately 0.7Ω and probably has an impedance of 8Ω. The output windings provide 100V line and 4, 8, & 16W.

Incidentally, this amplifier has a 60V supply rail (measured at the filter capacitor) and uses two 2SC-1030 (TO3 packages) as the drivers.

I am proposing to use the SC480 as the replacement loop driver amplifier. The coupling capacitor in the 30W unit is 2200μF 50V. This is polarised, although I would have expected it to be bipolar. Is there any problem with using the SC480 in this role? Information regarding the use of available impedance matching transformers is very hard to come by.

The impedance matching transformer under consideration is listed in the Altronics catalog on page 191 (Cat M-1136). This is a 60W unit, although a lower rating could be appropriate. (W. M., Kapunda, SA).

- If your inductive loop has a DC resistance of 4-5Ω you can certainly drive it with the SC480 or with any other direct-coupled amplifier for that matter, provided it is rated for a 4-ohm load. The connection from the amplifier to the loop should be direct, not via a transformer and capacitor, as in your suggested circuit.

If you want the SC480 to drive a transformer load, we just coincidentally have a circuit for doing that in this month's Circuit Notebook pages. If you want a higher power amplifier which will drive a 100V line output transformer, have a look at the Plastic Power PA amplifier described in the March 1997 issue. However note that this amplifier cannot drive a 100V line transformer and an inductive loop as well (nor can the SC480).

Overload problem in Mosfet amplifier

I have built a stereo power amplifier using Hitachi Mosfet devices (2SK1058 and 2SJ162) in the output stage. With the 2SJ162s, I am having trouble with severe distortion developing after a few seconds at maximum power into a 4Ω resistive load (I assume the devices are having "severe hernias" as they go into overload).

This is occurring with each device supplying about 5A (peak current). This is below the specifications which state that the device should be able to supply 7A max. As stated above, this is occurring only on the negative signal swings.

I was wondering if you know of any suspect "clones" that are circulating in the guise of Hitachi devices? They are TO3-P type. (G. G., via email).

● Without knowing anything about the circuit you have built, it is possible that the output stage is oscillating at very high frequencies, possibly at 100MHz or more (yep, way up in the FM band). You need to check this with an oscilloscope. If you don't have one, or your scope does not have a 100MHz capability, a check with a communications receiver or even an FM radio may indicate a high level of radiation.

If your scope has low bandwidth, you may observe apparent clipping or distortion of the waveform. When you use a scope with sufficiently wide bandwidth, this will be revealed as a large burst of oscillation superimposed on the waveform.

We think it is unlikely that you have suspect Mosfets. It is not commonly known that Mosfet amplifiers can be susceptible to supersonic oscillation and it can be quite difficult to "tame" them. The problem may be due to the PC board and general wiring layout. You may also need stopper resistors (try 100Ω) in series with each gate to cure the problem.

checked components, etc. Could you please advise me what I should be seeing on the scope at U3 pin5 and U2d pin11? Is it a pulse that reaches 5V and what it is its timing duration? (R. F., via email).

● You should be seeing a negative-going pulse at pin 5 of the LM1881 (U3), with an amplitude of nearly 5V and a duration of about 4µs. You should also be seeing a positive version of the same pulse at pin 11 of U2d, to operate switches U1a/b and trigger U5.

Finally, if U5 is triggering properly from this pulse (which corresponds to the colour burst and horizontal 'back porch' of each line), you should see pulses about 50µs long at TP2 and pin 3 of U5, again of about 5V peak amplitude.

From your description it's hard to suggest what may be going wrong if none of these pulses is present, and you've already tried replacing U3, U2 and many of the components around them.

You could try reducing the value of U3's input series resistor R5, to 560Ω or 470Ω. We understand that in one or two cases in the past, transistor Q1 has had a high enough output impedance to add significantly to R5 and caused excessive attenuation of the higher frequency video and sync components reaching U3. In turn, this seems to have prevented U3 from producing the colour burst pulses at pin 5.

Perhaps this is also the case with your unit, so it's worth reducing the value of R5 a little to see if that cures the problem.

Turbo timer playing up

I have recently purchased a Turbo Timer kit from Jaycar Electronics. All is installed (on a 1993 Mitsubishi Lancer GSR) but I have a problem – if the engine is running and then switched off, it stops.

Investigations show that the timer does not even attempt to operate. If I just turn the ignition on but do not start the engine, when the key is turned off the Turbo Timer responds as it should and it leaves the ignition on for the required time.

I have left the thermal circuit open such that the circuit thinks the engine is hot. The reset circuit works fine. It seems that the engine (either ignition spark or alternator?) are resetting the timer at switch off. Can you please help? (L. C., via email).

● Try changing the 2.2µF capacitor at pin 2 of IC1 to 100µF or if this still gives problems, to 470µF. This will provide a timing trigger when the ignition voltage falls slowly.

Notes & Errata

Sunset Switch, June 2003: the 10µF capacitor connected from the +12V rail to the emitter of Q1 has been omitted from the circuit diagram on page 36. The wiring diagram (Fig.3) is correct. Also, four 10µF capacitors have been omitted from the Parts List. **SC**

WARNING!

SILICON CHIP magazine regularly describes projects which employ a mains power supply or produce high voltage. All such projects should be considered dangerous or even lethal if not used safely. Readers are warned that high voltage wiring should be carried out according to the instructions in the articles. When working on these projects use extreme care to ensure that you do not accidentally come into contact with mains AC voltages or high voltage DC. If you are not confident about working with projects employing mains voltages or other high voltages, you are advised not to attempt work on them. Silicon Chip Publications Pty Ltd disclaims any liability for damages should anyone be killed or injured while working on a project or circuit described in any issue of SILICON CHIP magazine. Devices or circuits described in SILICON CHIP may be covered by patents. SILICON CHIP disclaims any liability for the infringement of such patents by the manufacturing or selling of any such equipment. SILICON CHIP also disclaims any liability for projects which are used in such a way as to infringe relevant government regulations and by-laws.

Advertisers are warned that they are responsible for the content of all advertisements and that they must conform to the Trade Practices Act 1974 or as subsequently amended and to any governmental regulations which are applicable.

MARKET CENTRE

Cash in your surplus gear. Advertise it here in Silicon Chip.

CLASSIFIED ADVERTISING RATES

Advertising rates for this page: Classified ads: $20.00 (incl. GST) for up to 20 words plus 66 cents for each additional word. Display ads: $33.00 (incl. GST) per column centimetre (max. 10cm). Closing date: five weeks prior to month of sale.

To run your classified ad, print it clearly in the space below or on a separate sheet of paper, fill out the form & send it with your cheque or credit card details to: Silicon Chip Classifieds, PO Box 139, Collaroy, NSW 2097. Alternatively, fax the details to (02) 9979 6503 or send an email to **silchip@siliconchip.com.au**

Taxation Invoice ABN 49 003 205 490

Enclosed is my cheque/money order for $_____ or please debit my

☐ Bankcard ☐ Visa Card ☐ Master Card

Card No. ☐☐☐☐ ☐☐☐☐ ☐☐☐☐ ☐☐☐☐

Signature_____ Card expiry date_____/_____

Name _____

Street _____

Suburb/town _____ Postcode_____

Phone:_____ Fax:_____ Email:_____

FOR SALE

WEATHER STATIONS: Windspeed & direction, inside temperature, outside temperature & windchill. Records highs & lows with time and date as they occur. Optional rainfall and PC interface. Used by Government Departments, farmers, pilots, and weather enthusiasts. Other models with barometric pressure, humidity, dew point, solar radiation, UV, leaf wetness, etc. Just phone, fax or write for our FREE catalogue and price list. Eco Watch phone: (03) 9761 7040; fax: (03) 9761 7050; Unit 5, 17 Southfork Drive, Kilsyth, Vic. 3137. ABN 63 006 399 480.

KITS KITS AND MORE KITS! Check 'em out at **www.ozitronics.com**

FULL SET OF ALL EDITIONS OF SILICON CHIP MAGAZINES, that is from first edition November 1987 through to current labels. All in very good condition. Best practical offer (02) 6551 2735. Email jeastwood@ceinternet.com.au

UNIVERSAL DEVICE PROGRAMMER: Low cost, high performance, 48-pin, works in DOS or Windows incl. NT/2000. $1364. Universal EPROM programmer $467.50. Also adaptors, (E)EPROM, PIC, 8051 programmers, EPROM simulator and eraser.

Dunfield C Compilers: Everything you need to develop C and ASM software for 68HC08, 6809, 68HC11, 68HC12, 68HC16, 8051/52, 8080/85, 8086, 8096 or AVR: $198 each. Demo disk available.

ImageCraft C Compilers: 32-bit Windows IDE and compiler. For AVR, 68HC-08, 68HC11, 68HC12, 68HC16. $385.00

Atmel Flash CPU Programmer: Handles the 89Cx051, 89C5x, 89Sxx in both DIP and PLCC44 and some AVR's, most 8-pin EEPROMS. Includes socket for serial ISP cable. $220, $11 p&p. SOIC adaptors: 20 pin $132.00, 14 pin $126.50, 8 pin $121.00.

Full details on web site. Credit cards accepted.

GRANTRONICS PTY LTD, PO Box 275, Wentworthville 2145. (02) 9896 7150 or http://www.grantronics.com.au

Silicon Chip Binders

★ Heavy board covers with 2-tone green vinyl covering

★ SILICON CHIP logo printed in gold-coloured lettering on spine & cover

Price: $A12.95 plus $A5.50 p&p each (Australia only; not available elsewhere). Buy five and get them postage free.

Just fill in & mail the handy order form in this issue; or fax (02) 9979 6503; or ring (02) 9979 5644 & quote your credit card number.

TAIG MACHINERY

Micro Mini Lathes and Mills
From $489.00

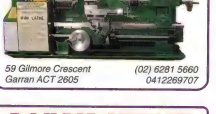

59 Gilmore Crescent
Garran ACT 2605
(02) 6281 5660
041269707

D.I.Y PCB SUPPLIES
& MADE TO ORDER PCBs

For more details: **www.acetronics.com.au**
Phone (02) 9600 6832
email: **acetronics@acetronics.com.au**

SPEAKER AND HOME THEATRE SUPPLIES. New and Secondhand Speaker Drivers. Speaker Repairs and Kits. Projectors and Screens. Delivery anywhere in Australia. Melb. (03) 5986 1128; **www.penhometheatre.com.au**

ANTENNAS 2.4GHz: low cost, hobby antennas for 'WiFi' wireless networking. Directional (6, 12, 29dBi) and omni-directionals (8, 11, 14dBi). Custom low-loss cables & pigtails also available. **http://www.erlang-software.com/FreeNet/ForSale**

New New New

Silvertone **Mark22-SM**
Slimline Mini FM R/C Receiver

- 6 Channels
- 10kHz frequency separation
- Size: 55 x 23 x 20mm
- Weight: 25gm
- Modular Construction

Price: $A129.50 with crystal

Silvertone **Electronics**
PO Box 580, Riverwood, NSW 2210.
Ph/Fax (02) 9533 3517
email: youngbob@silvertone.com.au
Website:www.silvertone.com.au

VIDEO - AUDIO - VGA

distribution amps - splitters
digital standards converters - tbc's
switchers - cables - adaptors
genlockers - scan converters

Come to the specialists... **QUESTRONIX**

See products and download pricelist at www.questronix.com.au
fax (02) 4341 2795 **phone (02) 4343 1970**
email: questav@questronix.com.au

Need prototype PC boards?

We have the solutions – we print electronics!
Four-day turnaround, less if urgent; Artwork from your own positive or file; Through hole plating; Prompt postal service; 29 years technical experience; Inexpensive; Superb quality.
Printed Electronics, 12A Aristoc Rd, Glen Waverley, Vic 3150.
Phone: (03) 9545 3722; Fax: (03) 9545 3561
Call Mike Lynch and check us out!
We are the best for low cost, small runs.

USB KITS: Stepper Motor Controller, DTMF Transceiver, Thermometer, DDS HF Generator, Compass, 4-Channel Voltmeter, I/O Relay Card. Also available: Digital Oscilloscope, Temperature Loggers, VHF Receivers and USB Active X (and USBDOS.exe file) to control our kits from your application. **www.ar.com.au/~softmark**

GOLDSTAR OS-7040A 40 MHZ OSCILLOSCOPE: as new. Very little use and in new condition, for sale @ $450.00 ONO. Also spectrum analyzer 100KHz - 1GHz by ITC USA, new condition @ $900.00 ONO. Contact 0418 229000 for details.

SPEAKERBITS

Foam surrounds, voice coils, cones and more
Original parts for Dynaudio, Tannoy and others
Expert speaker repairs – 20 years experience
Australian agents for ortofon products
Trade welcome – email for your user ID
Phone (03) 9682 2487

www.speakerbits.com.au

PENTIUM 4 WITH ISA SLOTS!!!

Catalog 17078. Industrial Motherboard. 533MHz Front Side Bus, plus on-board Watch Dog Timer and Ethernet. This is a "well sorted" quality industrial board. For more detail: phone Microgram Computers (02) 4389 8444 or **www.mgram.com.au**

Leader Modbus Data Acquisition Modules analog inputs, RTD, Thermocouple, analog outputs, digital Inputs and output modules
Labjack USB Data Acquisition Module features 8 12bit analog inputs, 20 digital I/O, 2 analog outputs and high speed counter. Free software, Labview driver and ActiveX component.
DAS005 Parallel Port Data Acquisition Module features 8 12bit Analog inputs, 4 Digital I/Ps & 4 Digital O/Ps. Free windows software and source code.
Dual Relay Modules suitable for TTL and Open Collector Outputs
Programmers for Atmel and PIC microcontrollers.
Switch Mode and Linear Power Supplies and DC-DC convertors.
FAB Programmable Logic Controllers. Low cost, high performance. Programming software and SCADA software free. Heaps of features.
Full details and credit card ordering available at **www.oceancontrols.com.au**

PCBs MADE, ONE OR MANY. Any format, hobbyists welcome. Sesame Electronics (02) 9586 4771.
sesame777@optusnet.com.au; **http://members.tripod.com/~sesame_elec**

BUY FROM HONKERS, PAY IN OZ. Get many common passives, ICs and LCDs direct from Hong Kong but pay in Oz. **www.kitsrus.com/bits.html**

Do You Eat, Breathe and Sleep Technology?

Management & Sales Positions

We are a rapidly growing, Australian-owned international retailer with more than 30 stores in Australia and we have a growing expansion program to open many more, so we need dedicated individuals to join our team to help achieve our goals.
If you are customer focused, have an eye for detail, empathy for the products we sell and have recently completed a TAFE of University degree in electronics, we want to meet you.
Career opportunities with full training are available now if you have the drive and ambition to make your future with Jaycar.
We offer a competitive salary, sales commission and many other benefits. To apply for these positions please send your C.V. indicating the role you are interested in to the address shown below.

Retail Operations Manager
Jaycar Electronics Pty. Ltd.
P.O. Box 6424
Silverwater NSW 1811
Fax: (02) 9741-8530
Email: jobs@jaycar.com.au

Jaycar ELECTRONICS

Jaycar Electronics is an equal opportunity employer and actively promotes staff from within the organisation.

CARBA-TEC TOOLS FOR WOOD

Building speaker boxes? Mounting electrical components onto solid timber? You may need the Carba-tecTOOLS for WOOD catalogue!!

We have Australia's largest range of woodworking handtools & machinery. Please contact us for your FREE 220 page colour catalogue or come in & see us at:

32 PERCY AUBURN 2144 9649 5077 www.carbatec.com.au

Microzed.com.au
PIC/AXE CHIP SPECIALIST
PO Box 634 ARMIDALE 2350 (296 North Cooke's Rd)
Ph: (02) 6772 2777 – may time out to Mobile 0438 277 634.
Fax: (02) 6772 8987

S-Video . . . Video . . . Audio . . . VGA distribution amps, splitters, standards converters, tbc's, switchers, cables, etc, & price list: **www.questronix.com.au**

RCS HAS MOVED to 41 Arlewis St, Chester Hill 2162 and is now open, with full production. Tel (02) 9738 0330; Fax 9738 0334. **rcsradio@cia.com.au**; **www.cia.com.au/rcsradio**

KIT ASSEMBLY

NEVILLE WALKER KIT ASSEMBLY & REPAIR:

- Australia wide service
- Small production runs
- Specialist "one-off" applications

Phone Neville Walker (07) 3857 2752
Email: flashdog@optusnet.com.au

WANTED

AMPEX 351-2 Valve Stereo Tape Recorder. Any condition considered. Please phone Peter Watson on (07) 4622 3968 or email: **pwaudio@bigpond.com.au**

EARLY HIFI'S, AMPLIFIERS, Speakers, Turntables, Valves, Books ; Quad, Leak, Pye, Lowther, Ortofon, SME, Western Electric, Altec, Marantz, McIntosh, Goodmans, Wharfedale, Tannoy, radio and wireless. Collector/Hobbyist will pay cash. (02) 9440 1267. **johnmurt@highprofile.com.au**

Satellite TV Reception

International satellite TV reception in your home is now affordable. Send for your free info pack containing equipment catalog, satellite lists, etc or call for appointment to view. We can display all satellites from 76.5° to 180°.

AV-COMM P/L, 24/9 Powells Rd, Brookvale, NSW 2100.
Tel: 02 9939 4377 or 9939 4378.
Fax: 9939 4376; www.avcomm.com.au

Printed Circuit Board Manufacture
48-Hour service • High quality • Low prices
1 offs to any quantity
Artwork design if required
Call for obligation free quote...
INSTANT PCBs, PO Box 448, Avalon 2107
Ph (02)9974 1189 Fax (02)9974 5491

Silicon Chip

Circuit Ideas Wanted

Do you have a good circuit idea? If so, sketch it out, write a brief description of its operation & send it to us. Provided your idea is workable & original, we'll publish it in Circuit Notebook & you'll make some money. We pay up to $60 for a good circuit so send your idea to:

Silicon Chip Publications,
PO Box 139, Collaroy, NSW 2097.

Advertising Index

Acetronics	94
Altronics	loose insert
Av-Comm Pty Ltd	95
BitScope Designs	67
Carba-Tec Tools	95
Clarke & Severn	67
Dick Smith Electronics	18-21
Eco Watch	93
Elan Audio	31
Evatco	87
Futurlec	55
Gadget Central	IFC
Grantronics	93
Harbuch Electronics	53
Instant PCBs	95
Hy-Q International	67
Jaycar	45-52,95
JED Microprocessors	5,67
Kalex	87
Microgram Computers	3,94
MicroZed Computers	67,77,95
Printed Electronics	94
Procon Technology	67
Quest Electronics	67,94
RCS Radio	67,95
RF Probes	87
Silicon Chip Back Issues	88-89
Silicon Chip Binders	28,72
Silicon Chip Bookshop	96,IBC
SC Car Projects Book	39,OBC
Silicon Chip Subscriptions	73
SC Testbench Book	63
Silvertone Electronics	94
Soundlabs Group	67
Speakerbits	94
Taig Machinery	94
Telelink Communications	67

PC Boards

Printed circuit boards for SILICON CHIP projects are made by:
RCS Radio Pty Ltd. Phone (02) 9738 0330. Fax (02) 9738 0334.

SILICON CHIP REFERENCE

GREAT BOOKS FOR

ALL PRICES INCLUDE GST AND A

AUDIO POWER AMPLIFIER DESIGN HANDBOOK

by Douglas Self 3rd Edition 2002

A handbook for professionals and students from one of the world's most respected audio authorities. New edition is more comprehensive than ever with a new chapter on Class G amplifiers and further new material on output coils, thermal distortion, relay distortion, ground loops, triple EF output stages and convection cooling. 427 pages in paperback.

NEW NEW NEW NEW

PIC Your Personal Introductory Course

by John Morton – 2nd edition 2001

Concise and practical guide to getting up and running with the PIC Microcontroller. Assumes no prior knowledge of microcontrollers, introduces the PIC's capabilities through simple projects. Ideal introduction for students, teachers, technicians and electronics enthusiasts – perfect for use in schools and colleges. 270 pages in soft cover.

VIDEO SCRAMBLING AND DESCRAMBLING FOR SATELLITE AND CABLE TV

by Graf & Sheets 2nd Edition 1998

If you've ever wondered how they scramble video on cable and satellite TV, this book tells you! Encoding/decoding systems (analog and digital systems), encryption, even schematics and details of several encoder and decoder circuits for experimentation. Intended for both the hobbyist and the professional. 290 pages in paperback.

AUDIO ELECTRONICS

By John Linsley Hood. First published 1995. Second edition 1999.

For anyone involved in designing, adapting and using analog and digital audio equipment. It covers tape recording, tuners and radio receivers, preamplifiers, voltage amplifiers, audio power amplifiers, compact disc technology and digital audio, test and measurement, loudspeaker crossover systems, power supplies and noise reduction systems. 375 pages in soft cover.

UNDERSTANDING TELEPHONE ELECTRONICS

By Stephen J. Bigelow. 4th edition 2001

Based mainly on the American telephone system, this book covers conventional telephone fundamentals, including analog and digital communication techniques. Provides basic information on the functions of each telephone component, how dial tones are generated and how digital transmission techniques work. 402 pages, soft cover.

EMC FOR PRODUCT DESIGNERS

By Tim Williams. First published 1992. 3rd edition 2001.

Widely regarded as the standard text on EMC, provides all the key information needed to meet the requirements of the EMC Directive. Most importantly, it shows how to incorporate EMC principles into the product design process, avoiding cost and performance penalties, meeting the needs of specific standards and resulting in a better overall product. 360 pages in paperback.

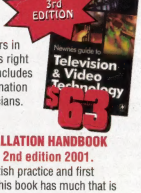

GUIDE TO TV & VIDEO TECHNOLOGY

By Eugene Trundle. 3rd Edition 2001

Eugene Trundle has written for many years in *Television* magazine and his latest book is right up to date on TV and video technology. includes both theory and practical servicing information and is ideal for both students and technicians. 382 pages, in paperback.

ANALOG ELECTRONICS

By Ian Hickman. 2nd edition1999.

Essential reading for electronics designers and students alike. It will answer nagging questions about core analog theory and design principles as well as offering practical design ideas. With concise design implementations, with many of the circuits taken from Ian Hickman's magazine articles. 294 pages in soft cover.

TELEPHONE INSTALLATION HANDBOOK

by Steve Roberts. 2nd edition 2001.

Based mainly on British practice and first published in 1997, this book has much that is relevant to Australian systems as a guide to home and small business installations. A practical guide to installation of telephone wiring, ranging from single extension sockets to PABX, with the necessary tools, test equipment and materials needed by installers.. 178 pages in soft cover.

Microcontroller Projects in C for the 8051

by Dogan Ibrahim. Published 2000.

Through graded projects the author introduces the fundamentals of microelectronics, the 8051 family, programming in C and the use of a C compiler. The AT89C2051 is an economical chip with re-writable memory. Provides an interesting, enjoyable and easily mastered alternative to more theoretical textbooks. 178 pages in paperback.

BOOKSHOP

ENQUIRING MINDS!

LOWER THAN RECOMMENDED RETAIL

10% OFF! WANT TO SAVE 10%? SILICON CHIP SUBSCRIBERS AUTOMATICALLY QUALIFY FOR A 10% DISCOUNT ON ALL BOOK PURCHASES!

Power Supply Cookbook

by Marty Brown. 2nd edition 2001.

An easy-to-follow, step-by-step design framework for a wide variety of power supplies. Anyone with a basic knowledge of electronics can create a very complicated power supply design . Magnetics, feedback loop, EMI/RFI control and compensation design are all described in simple language. 265 pages in paperback.

$99

Analog Cct Techniques With Digital Interfacing

by T H Wilmshurst. Published 2001.

Covers all the analog electronics needed in a wide range of higher education programs: first degrees in electronic engineering, experimental science course, MSc electronics and electronics units for HNDs. Text is supported by numerous worked examples and experimental exercises. 312 pages in paperback.

$89

$69

VIDEO & CAMCORDER SERVICING AND TECHNOLOGY

by Steve Beeching (Published 2001)

Provides fully up-to-date coverage of the whole range of current home video equipment, analog and digital. Information for repair and trouble-shooting, with explanations of the technology of video equipment. 318 pages in soft cover.

Antenna Toolkit

by Joe Carr. 2nd edition 2001.

Together with the CD software included, the reader will have a complete solution for constructing or using an antenna - bar the actual hardware. The software is based on the author's Antler program, which provides a simple Windows-based aid to carrying out the design calculations at the heart of successful antenna design. 253 pages in paperback.

$87

Electric Motors And Drives

by Austin Hughes. 2nd edition 1993.

Reprinted 2001.

For non-specialist users – explores most of the widely-used modern types of motor and drive, including conventional and brushless DC, induction, stepping, synchronous and reluctance motors. 339 pages, in paperback.

$63

$63

Interfacing With C

by Howard Hutchings. Revised by Mike James. 2nd edition 2001.

Anyone interested in ports, transducer interfacing, analog to digital conversion, convolution, filters or digital/analog conversion will benefit from reading this book. The principals precede the applications to provide genuine understanding and encourage further development. 302 pages in paperback.

NEW NEW NEW NEW

PIC IN PRACTICE

by D W Smith Published 2002

Based on popular short courses on the PIC, for professionals, students and teachers. Can be used at a variety of levels. An ideal introduction to the world of microcontrollers for hobbyists, students and professionals. 255 pages in paperback.

$52

$69

PRACTICAL RF HANDBOOK

by Ian Hickman 3rd Edition 2002

A guide to RF design for engineers, technicians, students and enthusiasts. Covers all of the key topics in RF: analog design principles, transmission lines, transformers, couplers, amplifiers, oscillators, modulation, transmitters and receivers, propagation and antennas. 279 pages in paperback.

NEW NEW NEW NEW

ORDER HERE

- ☐ ANALOG CIRCUIT TECHNIQUES W/DIGITAL INT. $69.00
- ☐ ANALOG ELECTRONICS $89.00
- ☐ ANTENNA TOOLKIT $87.00
- ☐ AUDIO ELECTRONICS $92.00
- ☐ AUDIO POWER AMPLIFIER DESIGN $89.00
- ☐ ELECTRIC MOTORS AND DRIVES $63.00
- ☐ EMC FOR PRODUCT DESIGNERS $103.00
- ☐ GUIDE TO TV & VIDEO TECHNOLOGY $63.00
- ☐ INTERFACING WITH C $63.00
- ☐ M'CONTROLLER PROJECTS IN C FOR 8051 ..... $73.00
- ☐ PIC IN PRACTICE $46.00
- ☐ PIC - YOUR PERSONAL INTRODUCTORY COURSE $46.00
- ☐ POWER SUPPLY COOKBOOK $99.00
- ☐ PRACTICAL RF HANDBOOK $69.00
- ☐ TELEPHONE INSTALLATION HANDBOOK $69.00
- ☐ UNDERSTANDING TELEPHONE ELECTRONICS $70.00
- ☐ VIDEO & CAMCORDER SERVICING/TECHNOLOGY $69.00
- ☐ VIDEO SCRAMBLING/DESCRAMBLING $87.00

TAX INVOICE

Your Name _____ (PLEASE PRINT)

Address _____

_____ Postcode _____

Daytime Phone No. (STD) _____

Email _____ @ _____

☐ Cheque/Money Order enclosed *OR*

☐ Charge my credit card – ☐ Bankcard ☐ Visa Card ☐ MasterCard

No: | | | | | | | | | | | | | | | | |

Signature _____ Card expiry date | | | / | |

PLUS P&P (if applic): $..... TOTAL$ AU.....

P&P Orders over $100 P&P free in Australia. AUST: Add $A5.50 per book NZ: Add $A10 per book, $A15 elsewhere

POST TO: SILICON CHIP Publications, PO Box 139, Collaroy NSW, Australia 2097. **OR CALL** (02) 9979 5644 & quote your credit card details; or **FAX TO** (02) 9979 6503

ALL TITLES SUBJECT TO AVAILABILITY. PRICES VALID FOR MONTH OF MAGAZINE ISSUE ONLY. ALL PRICES INCLUDE GST

SILICON CHIP'S

Electronic Projects For Cars Vol. Two

17 TOP CAR PROJECTS TO BUILD

IGNITION PROJECTS: High-Energy Universal Ignition System; High-Energy Multispark CD System; Programmable Ignition Timing Module. **PIC-BASED PROJECTS:** Digital Speed Alarm & Speedometer; Digital Tachometer With LED Display; Digital Voltmeter (12V o 24V). **ALARMS & ENGINE MONITORS:** Blocked Filter Alarm; Simple Mixture Display Fo Fuel-Injected Cars; Motorbike Alarm; Headlight Reminder. **LIMITERS & IMMOBILISERS** Engine Immobiliser Mk.2; Engine Rev Limiter. **MISCELLANEOUS:** 4-Channel UHF Remote Control; LED Lighting For Cars; The Booze Buster Breath Tester; Little Dynamite Subwoofer; Neon Tube Modulator.

On Sale At Selected Newsagents

OR ORDER DIRECT FROM SILICON CHIP PUBLICATIONS

Mail orders:	PO Box 139 Collaroy, NSW 2097
Phone Orders:	02) 9979 5644 (9-5, Mon-Fri)
Fax orders:	(02) 9979 6503 (24 hrs, 7 days)
Email orders:	office@silchip.com.au

Direct Order Prices:
Aust: $14.95 (incl. GST & P&P)
NZ/asia Pacific: $18.00 via airmail
Rest of World: $21.50 via airmail